20-15-615

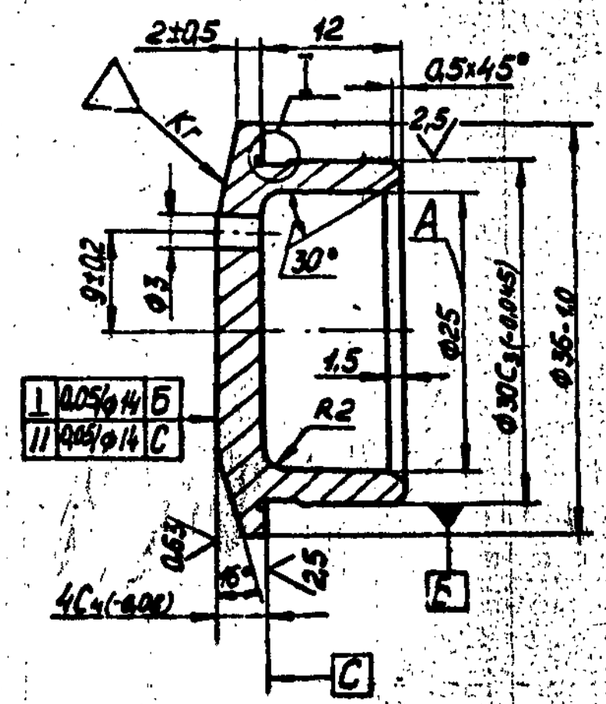

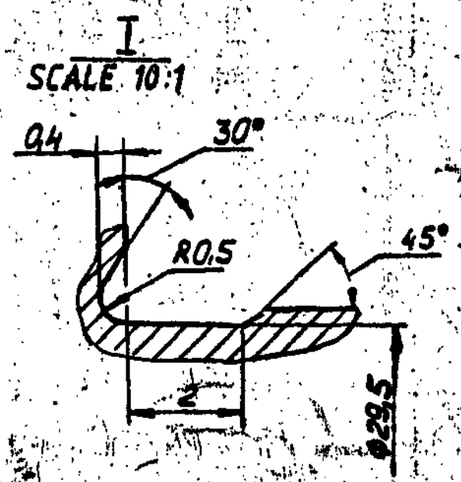

1. INSPECTION GROUP III AS PER TECHNICAL REQUIREMENTS TT-11.
2. HRC 60 TO 63.
3. UNSPECIFIED LIMIT DEVIATIONS OF DIMENSIONS ARE AS FOLLOWS FOR HOLES - AS PER A_7,
   SHAFTS - AS PER B_7,
   OTHERS - AS PER CM_7.
4. BOTTOM OF HOLE A MAY HAVE A CRATER 5mm IN DIAMETER AND 1.5 mm IN DEPTH.
5. COATING : CHEMICALLY OXIDIZED OILED.
   PERMISSIBLE COATING: CHEMICALLY PARKERIED.

(A) EQUIVALENT MATERIAL
STEEL 535A99 (EN31) TO BS: 970/103
CR 2 TO IS:4398-72

EXPLANATORY NOTE

6. REFERENCE MATERIAL QUOTED
   BALL BEARING STEEL WITH CHROMIUM (X) CONTENT 1.5 % BY WEIGHT

CHEMICAL COMPOSITION %

CARBON	0.95 — 1.05	SULPHUR	0.02 (max)
SILICON	0.17 — 0.37	PHOSPHORUS	0.027 (max)
MANGANESE	0.20 — 0.40	NICKEL	0.30 (max)
CHROMIUM	1.30 — 1.65	COPPER	0.25 (max)
		NICKEL & COPPER	0.50 (max)

PILOT SAMPLE SHOULD BE APPROVED BY A H S P BEFORE BULK PRODUCTION

ISSUE	DATE	NATURE OF AMENDMENTS
A	10-7-10	4th ALT COMM Mtg MINUT POINT No 8 DT 26-10-09

DRN
CHD
TCD
APPD
DATE 25-04-07

SCALE :- 2:1
DIMENSIONS IN mm
TOLERANCE ON DIMNS UNLESS OTHERWISE STATED
ALL THREADS CONFORM TO

EST. MASS 0,077 Kg

TO BE STAMPED OR MARKED WHERE INDICATED THUS (LETTERS)

ALL SHARP EDGES AND CORNERS TO BE REMOVED UNLESS OTHERWISE STATED MACHINED CORNERS TO HAVE R OUTSIDE R INSIDE EQUIVALENT CHAMFERS ARE PERMISSIBLE

MATERIAL :- WX 15 GOST 801-78

USED ON :- CB 20-15-664-1

CONTROLLERATE OF INSPECTION (HEAVY VEHICLES) AVADI

TITLE :- LEVER STOP

D S CAT NUMBER

DRAWING NUMBER 20-15-615

KVD No. 63452

Восстановлен с подлинника
Верно: [illegible] /Грищенко/

Инв. № подл. | Подп. и дата | Взам. инв. № | Инв. № дубл. | Подп. и дата

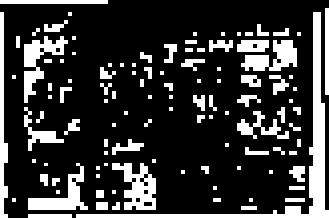

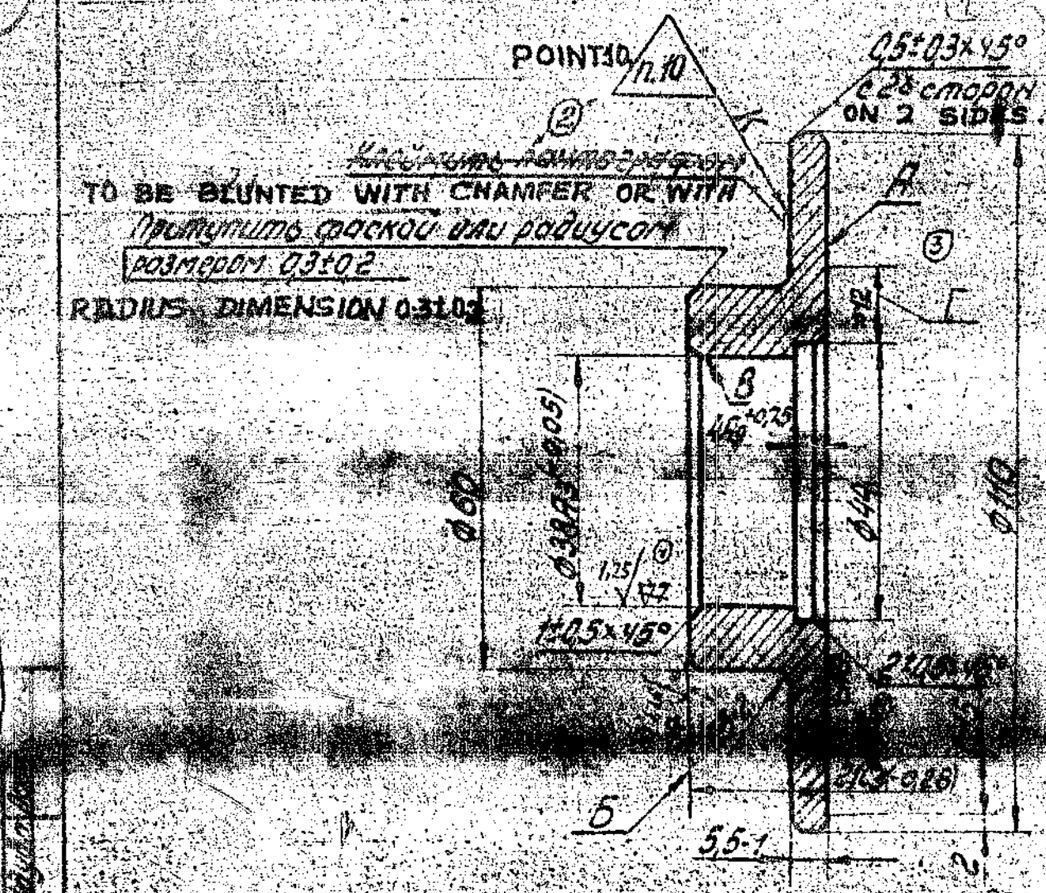

1. Inspection group III, TT-11.
2. To be carburized. Depth of case-hardened layer on surfaces A and Б should be 0.8 mm; min, on the rest of the surfaces ≤ 1.6 mm Hardness ~~HRC ≥ 56~~ on surface B ≥ ~~HRC 40~~. HRCэ ≥ 57 HRCэ ≥ 41
3. Dimensions with unspecified deviations should be obtained as per accuracy class 7 OST 1010.
4. Run-out of surface 'A' relative to surface 'B' should not exceed 0.1 mm. at dia. 100 mm.
5. Run-out of face Б relative to surface 'B' should not exceed 0.05 mm. at dia. 55 mm.
6. Face 'A' is to be checked with tool makers straight-edge., clearance of not more than 0.2 mm is allowed at dia. 110mm
7. Sharp edges are not allowed.
8. Non-straightness of surface 'A' should not exceed 0.007 mm. To be checked on working strip 15 mm wide in 4 places along the circumference.
9. Coating:- Chemical, oxidizing, except surface 'A'.
10. To be marked by electric-etching.
11. Surface roughness 0.63 is allowed on section.

A6

** СБ 20-15-664-1

			EST. MASS 0.520 Kg	TO BE STAMPED OR MARKED WHERE INDICATED THUS # LETTERS)
			ALL SHARP EDGES AND CORNERS TO BE REMOVED UNLESS OTHERWISE STATED MACHINED CORNERS TO HAVE R OUTSIDE R INSIDE EQUIVALENT CHAMFERS ARE PERMISSIBLE.	
A	23.11.87	AUTHY BK 82-394		
ISSUE	DATE	NATURE OF AMENDMENTS		
DRN		SCALE - 1 : 1	MATERIAL:- STEEL 20 X GOST 4543-71	USED ON:- ** СБ 315-644-2
CHD		DIMENSIONS IN mm.	CONTROLLERATE OF INSPECTION (HEAVY VEHICLES) AVADI	
TCD		TOLERANCE ON DIMNS UNLESS OTHERWISE STATED.	TITLE:- STOP DISC	
APPD			D S CAT NUMBER	DRAWING NUMBER 315-613-3
DATE	09-5-88	ALL THREADS CONFORM TO		

DRAWING NUMBER
315-644

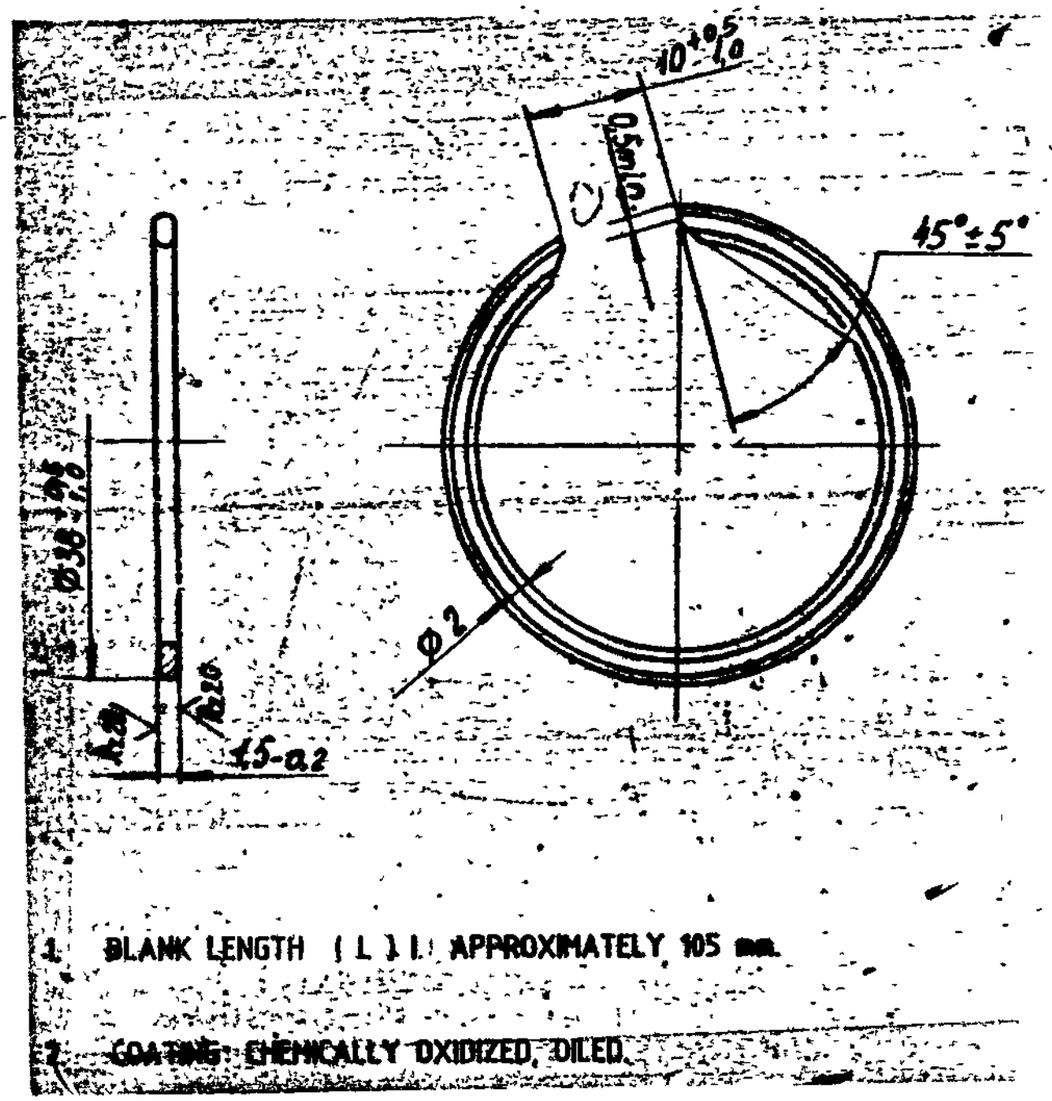

EXPLANATORY NOTE

3 REFERFENCE MATERIAL QUOTED

(a) CARBON STEEL COLD-DRAWN WIRE, SECOND CATEGORY, (II), DIAMETER 2.0mm WITH NORMAL ACCURACY OF TOLERANCE ± 0.020 / 0.015 TO EITHER OF GRADES KT-2 AND SK-7

(b) CHEMICAL COMPOSITION

CONTENTS %	GRADES	
	KT-2	SK-7
CARBON	0 86-0 91	0 68- 0 76
MANGANESE	0 20- 0 40	0 50- 0 80
SILICON	0.17- 0.37	0 17- 0 37
SULPHUR (max)	0 020	0 030
PHOSPHORUS(max)	0.020	0 030
CHROMIUM	0.05	0 05
NICKEL	0.05	0 05
COPPER	0.10	0 04

MECHANICAL PROPERTIES

TENSILE STRENGTH 180-205 Kg/mm^2

NO OF BENDS (min)- 9

NO OF TWISTS-(min) 16

PILOT SAMPLE SHOULD BE APPROVED BY A H S P BEFORE BULK PRODUCTION

EST WT 0 002 Kg

TO BE STAMPED OR MARKED WHERE INDICATED THUS ⊥⊥ (LETTERS)

ALL SHARP EDGES AND CORNERS TO BE REMOVED UNLESS OTHERWISE STATED MACHINED CORNERS TO HAVE R OUT SIDE R EQUIVALENT CHAMFERS ARE PERMISSIBLE

DRN	9 nov 87	
CHD		
TCD		
APPD		
DATE	4-5-87	
SCALE - 2.1		
DIMENSIONS IN mm		
TOLERANCE ON DIMNS UNLESS OTHERWISE STATED IS 2100-69		
ALL THREADS TO CONFORM TO		

MATERIAL - WIRE- II-2 GOST 9389-75

USED ON: C6 315 664 2 Cb 20-15-664-1

CONTROLLERATE OF QUALITY ASSURANCE (HEAVY VEHICLES) AVADI

TITLE

RETAINING RING

D I S CAT NUMBER

DRAWING NUMBER 315- 644

SIZE A6

SCALE A3

DRAWING NUMBER
515-616

Rz 20 (√)

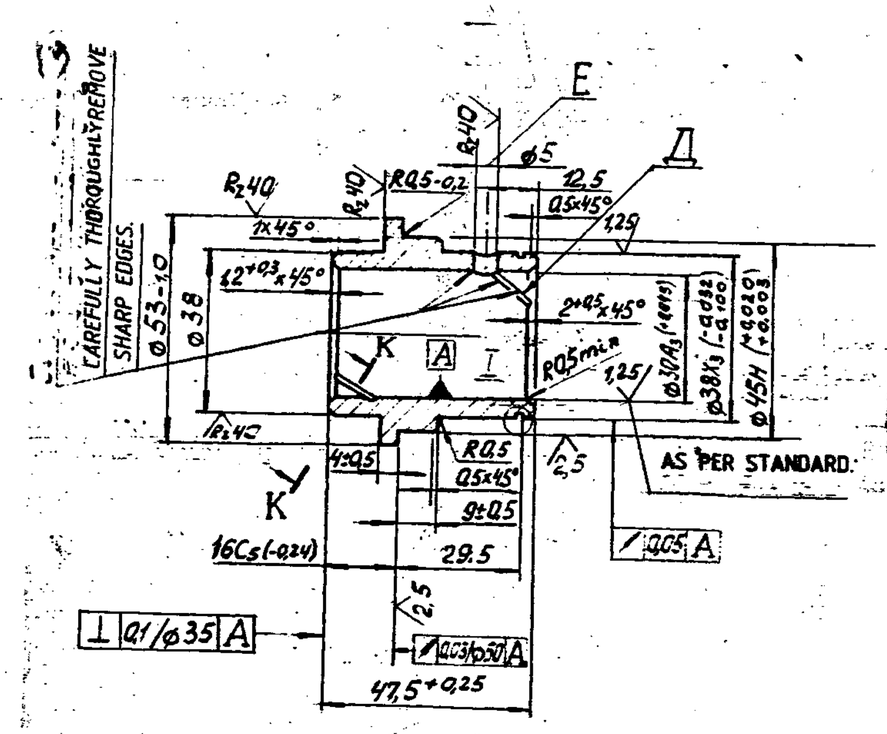

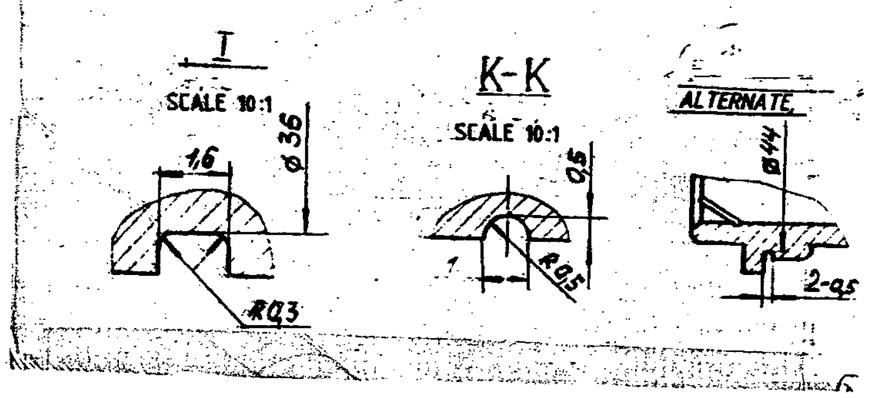

1. UNSPECIFIED LIMIT DEVIATIONS OF DIMENSIONS ARE AS FOLLOWS:-
   FOR HOLES - AS PER A7,
   SHAFTS - AS PER B7.

2. OIL GROOVE A1 -TO OUTLET, PITCH T = 60 MM, LEFT: IT SHOULD PASS THROUGH HOLE E.

EXPLANATORY NOTE :

3. REFERENCE MATERIAL QUOTED :

BRONZE Бр А Ж 9-4-55 TO GOST 1628-78.

бр А Ж 9-4 = GRADE OF BRONZE.
55 = 55mm DIA ROD.

a) CHEMICAL PROPERTIES :

GRADE	CONTENT TO ELEMENTS %								
	Al	Fe	Sn	Si	Pb	P	Zn	Mn	TOTAL
			MAXIMUM						
B АЖ 9-4	8.0 - 10.0	2.0 - 4.0	0.1	0.1	0.01	0.01	1.0	0.5	1.7

CONTENT OF IMPURITIES OF ARSENIC AND ANTIMONY MAY BE STANDARDIZED.

NICKEL UPTO 0.5 % IS ALLOWED.

b) MECHANICAL PROPERTIES : ANTIFRICTION , CORROSION RESISTANT EXTRUSION.

GRADE	ULTIMATE TENSILE STRENGTH Kgf/mm² (min)	RELATIVE ELONGATION % (min)	BRINNEL HARDNESS H B
бр А Ж 9-4	55	15	110 - 180

PILOT SAMPLE SHOULD BE APPROVED BY A H S P BEFORE BULK PRODUCTION.

EST. WT. 0.298 Kg	TO BE STAMPED OR MARKED WHERE INDICATED THUS # (LETTERS)

ALL SHARP EDGES AND CORNERS TO BE REMOVED UNLESS OTHERWISE STATED MACHINED CORNERS TO HAVE R OUTSIDE R INSIDE EQUIVALENT CHAMFERS ARE PERMISSIBLE.

ISSUE	DATE	NATURE OF AMENDMENTS

DRN
CHD
TCD
APPD
DATE 08-05-87
SCALE 1 : 1
DIMENSIONS IN MM
TOLERANCE ON DIMNS UNLESS OTHERWISE STATED IS 2102-69
ALL THREADS TO CONFORM TO

MATERIAL :-
BRONZE БрАЖ-9-4-55
GOST 1628-78

USED ON :-
СБ 20-15-664-1

CONTROLLERATE OF QUALITY ASSURANCE (HEAVY VEHICLES)
A V A D I

TITLE
BUSHING

D S CAT NUMBER

DRAWING NUMBER
515-616

СБ 20-15-664-1

Восстановлен с подлинника
Верно: 63421 Трищенко

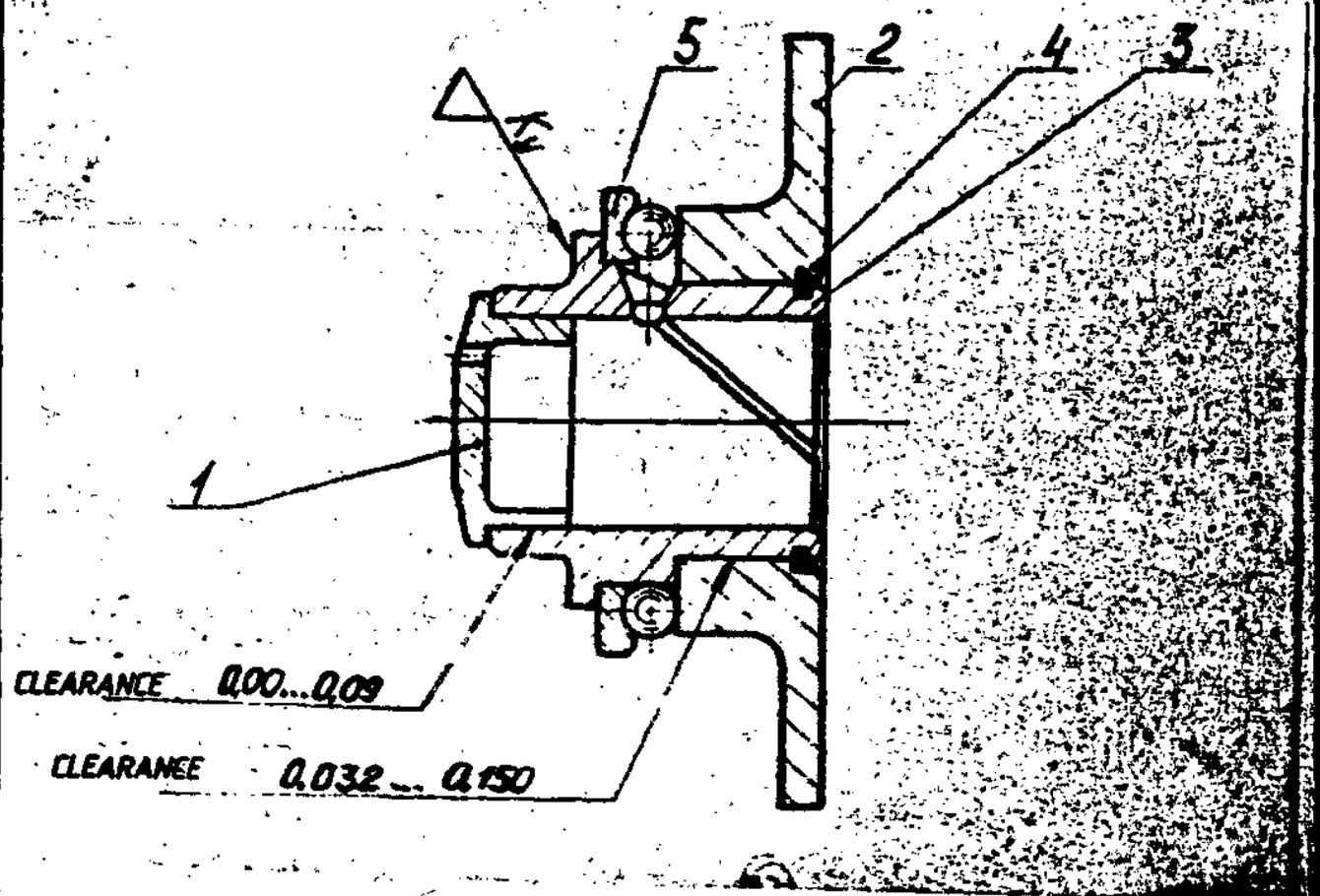

FORMAT.	ZONE.	REF.NO.	DESIGNATION	DESCRIPTION	QTY.	REMARKS
			—	PARTS		
		1	20-15-615	LEVER STOP	1	
		2	315-613-3	STOP DISK	1	
		3	515-616	BUSHING	1	
		4	315-644	LOCKING RING	1	
				STANDARD ARTICLES		
				BEARING 308109		
				(A) ETY 300-[illegible] ГОСТ [illegible]-75	1	

PILOT SAMPLE SHOULD BE APPROVED BY A H S P BEFORE BULK PRODUCTION

			EST. MASS 0,932 Kg	TO BE STAMPED OR MARKED WHERE INDICATED THUS ⊕ (LETTERS)
A	3.7.90	REPRODUCTION AUTHORIZED	ALL SHARP EDGES AND CORNERS TO BE REMOVED UNLESS OTHERWISE STATED MACHINED CORNERS TO HAVE R OUTSIDE R INSIDE EQUIVALENT CHAMFERS ARE PERMISSIBLE	
ISSUE	DATE	NATURE OF AMENDMENTS		
DRN		SCALE :- 1 : 1	MATERIAL :- —	USED ON :- СБ 20 - 27 - 00-4
CHD		DIMENSIONS IN mm	CONTROLLERATE OF INSPECTION (HEAVY VEHICLES) AVADI	
TCD		TOLERANCE ON DIMNS UNLESS OTHERWISE STATED	TITLE - BUSHING	
APPD			D S CAT NUMBER	DRAWING NUMBER СБ 20-15-664-1
DATE 25.4.87		ALL THREADS CONFORM TO		

DRAWING NUMBER
20-15-44-5

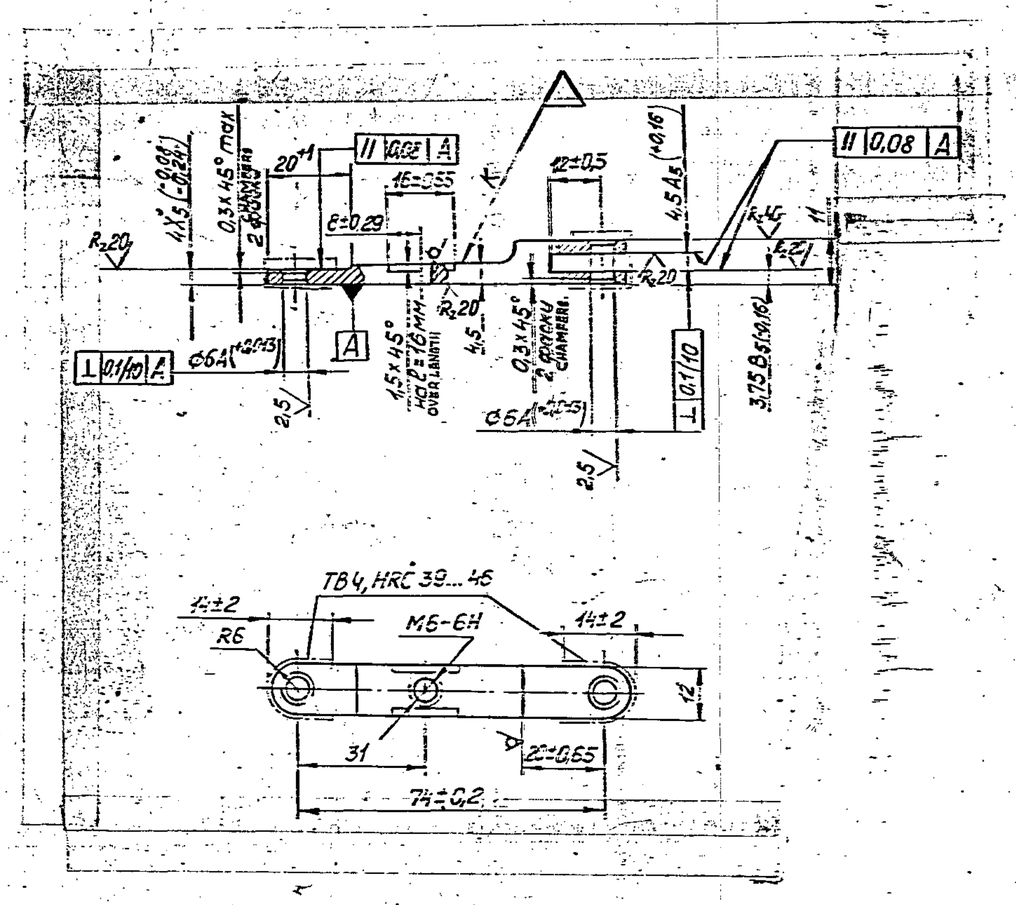

EXPLANATORY NOTE :-

MATERIAL QUOTED :- 38 X C GOST 4543-71.

38 X C – GRADE OF STEEL
CHROMIUM-SILICON STEEL.

(a) CHEMICAL COMPOSITION :-

GRADE OF STEEL	CONTENT OF ELEMENTS %							
	C	Si	Mn	Cr	P	S	Cu	Ni
					MAXIMUM			
38 X C	0.34 – 0.42	1.00 – 1.40	0.30 – 0.60	1.30 – 1.60	0.035	0.035	0.30	0.30

(b) MECHANICAL PROPERTIES :-

GRADE OF STEEL	YIELD POINT Kgf/mm²	ULTIMATE TENSILE STRENGTH Kgf/mm²	RELATIVE ELONGATION %	RELATIVE REDUCTION ALONG CROSS SECTION	IMPACT STRENGTH Kgfm/cm²
	MINIMUM				
38 X C	75	95	12	50	7

HARDENING TEMPERATURE °C = 900
COOLING MEDIUM = AIR
TEMPERING TEMPERATURE °C = 630
COOLING MEDIUM = AIR

1. INSPECTION GROUP IV AS PER TECHNICAL REQUIREMENTS TT-11.
2. REQUIREMENTS PLACED UPON STAMPING ARE AS PER GOST 7505-74, ACCURACY CLASS-2.
3. UNSPECIFIED LIMIT DEVIATIONS OF MACHINING DIMENSIONS ARE AS FOLLOWS: FOR SHAFTS - AS PER B_7.
   OTHERS - AS PER CM_7.
4. COATING: CHEMICALLY OXIDIZED, OILED.

EXPLANATORY NOTE ADDED ON 26-5-91

PILOT SAMPLE SHOULD BE APPROVED BY A H S P BEFORE BULK PRODUCTION.

EST. WT. 0.049 kg.

TO BE STAMPED OR MARKED WHERE INDICATED THUS ⊕ (LETTERS)

ALL SHARP EDGES AND CORNERS TO BE REMOVED UNLESS OTHERWISE STATED MACHINED CORNERS TO HAVE R OUTSIDE R INSIDE EQUIVALENT CHAMFERS ARE PERMISSIBLE.

ISSUE	DATE	NATURE OF AMENDMENTS

DRN
CHD
TCD
APPD
DATE 7-5-87
SCALE :- 1:1
DIMENSIONS IN mm.
TOLERANCE ON DIMNS UNLESS OTHERWISE STATED IS 2102-69
ALL THREADS TO CONFORM TO

MATERIAL :- 38XC GOST 4543-71
USED ON :- CS 20-15-671
CONTROLLERATE OF QUALITY ASSURANCE (HEAVY VEHICLES) AVADI
TITLE RACK LINK
D S CAT NUMBER
DRAWING NUMBER 20-15-44-5

SIZE A2

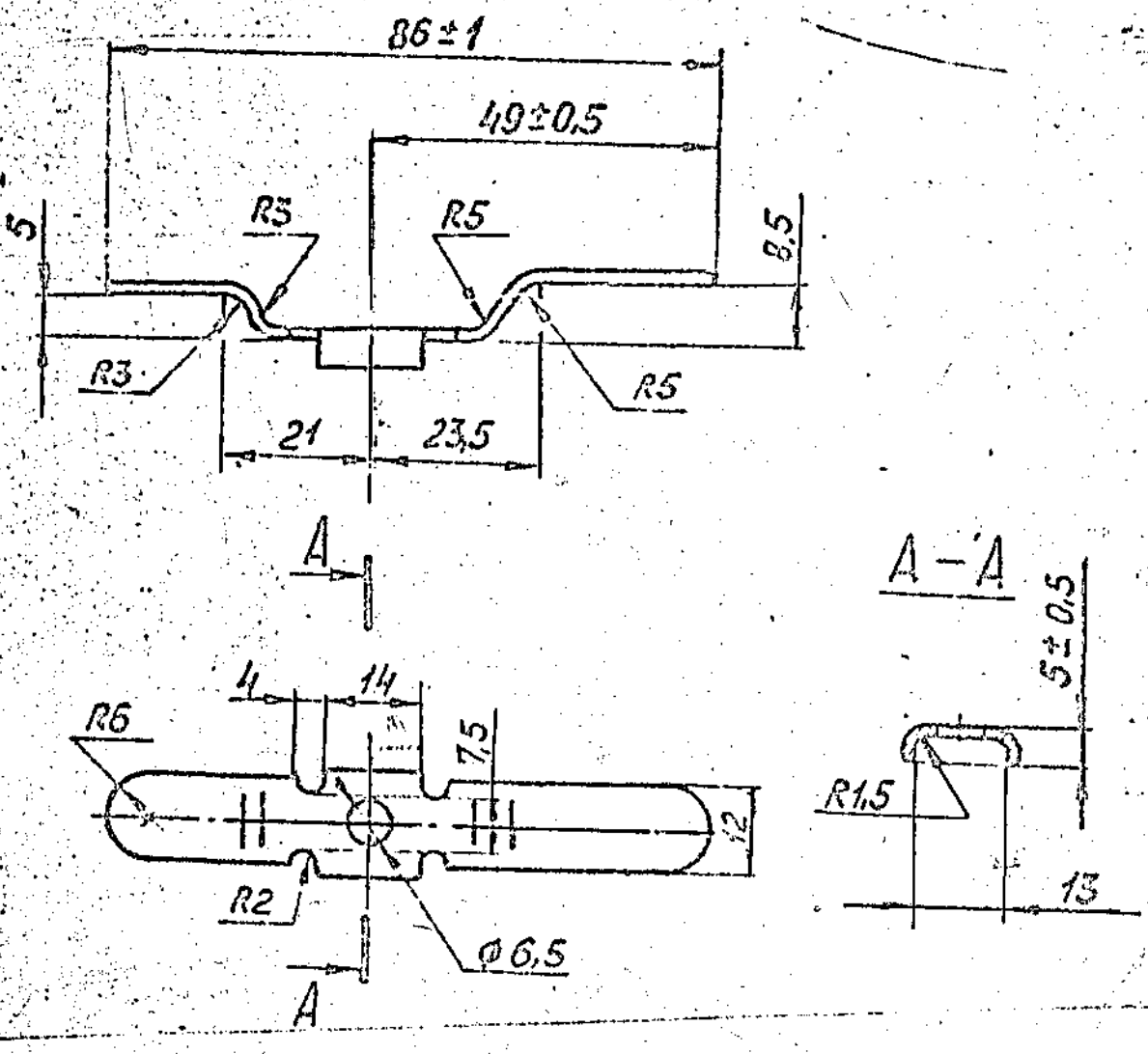

1. HRC 39 TO 46.

2. REQUIREMENTS PLACED UPON STAMPING ARE AS PER STANDARD .82050-16.

3. COATING: CHEMICALLY OXIDIZED, OILED.

SHEET 1.5 GOST 19904-74 / 65Г GOST 1542-71

(A) EQUIVALENT MATERIAL

75 C6 TO IS:2507/EN 42 J BS:970

PILOT SAMPLE SHOULD BE APPROVED BY A H S P BEFORE BULK PRODUCTION

			EST. MASS 0,010 Kg	TO BE STAMPED OR MARKED WHERE INDICATED THUS (LETTERS)
A	16.8.10	4th Alt.Comm.Meeting Minutes Point No.12 Dt:26-10-09	ALL SHARP EDGES AND CORNERS TO BE REMOVED UNLESS OTHERWISE STATED MACHINED CORNERS TO HAVE R OUTSIDE R INSIDE EQUIVALENT CHAMFERS ARE PERMISSIBLE	
ISSUE	DATE	NATURE OF AMENDMENTS		
DRN		SCALE :- 1 : 1	MATERIAL :- SEE ABOVE	USED ON :- CG 20-15-671
CHD		DIMENSIONS IN mm	CONTROLLERATE OF INSPECTION / HEAVY VEHICLES / AVADI	
TCD		TOLERANCE ON DIMNS UNLESS OTHERWISE STATED	TITLE :- PLATE	
APPD			D S CAT NUMBER	DRAWING NUMBER 20-15-685
DATE	6-3-87	ALL THREADS CONFORM TO		

353 23

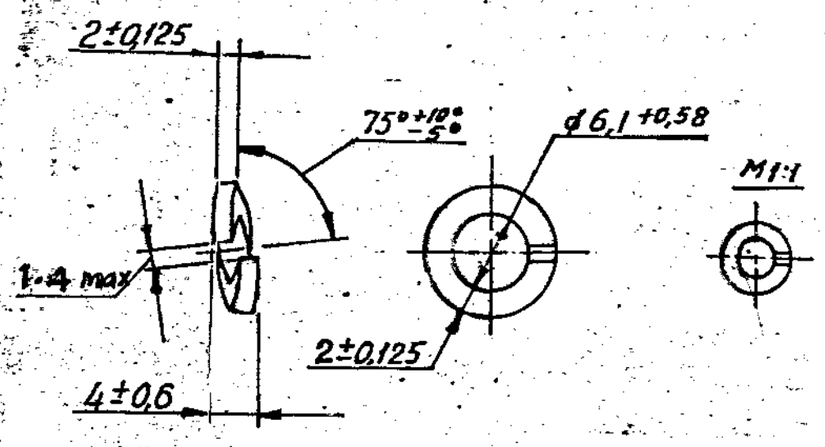

1. COATING: CADMIUM9 CHROMATIZING AS PER ЧЧЛ 104 WITH ELIMINATION OF HYDROGEN EMBRITTLEMENT.

2. WASHER 6T.65G 09 GOST 6402-70 MAY BE USED.

EXPLANATORY NOTE :

3. REFERENCE MATERIAL QUOTED:

SPRING WASHER, NOMINAL THREAD DIA 6mm, HEAVY WASHER 'T' PARKERISED AND OILED '0,6' AND REFERENCE NOTE '2' ON ALTERNATE MATERIAL ZINC PLATED '09' TO GOST 6402-70 AND MANUFACTURED IN ACCORDANCE WITH CARBON STRUCTURAL HOT ROLLED STEEL GRADE 65 G TO GOST 1050-74.

a) CHEMICAL COMPOSITION:

GRADE OF STEEL	CONTENT OF ELEMENTS %					
	C	SI	Mn	Cr	S	P
				MAXIMUM		
65G	0,62 – 0,70	0,17 – 0,37	0,90 – 1,20	0.25	0,040	0.35

RESIDUAL CONTENT OF COPPER AND NICKEL SHOULD NOT EXCEED 0,25% EACH

b) MECHANICAL PROPERTIES UNDER NORMALISED CONDITION: AS PER GRADE 65G, 1050-74.

GRADE OF STEEL	ULTIMATE TENSILE STRENGTH Kgf/mm²	YIELD POINT Kgf/mm²	ELONGATION %	HARDNESS BHN MAX
65 G	75	44	9	285

(A) Cb 327-00-73, Cb 3334-00-47, Cb 3335-00-9, Cb 337-100, Cb 3301-00-44, Cb 406-12-75, Cb 406-13-75, Cb 3308-15-2, Cb 310-00-14, Cb 411-00-56, Cb 3320-00-43, Cb 315-606-12, Cb 406-12-44, Cb 406-13-44, Cb 3300-00-27 CX, Cb 3301-00-37, Cb 3308-00-17, Cb 3320-00-33, Cb 3335-00-24

CQA(HV)5.06.607E (D)

CQA(HV)5.06.001E (C)

USED ON
Cb 3338-00-16*
Cb 3338-401-10
Cb 3338-406-7
Cb 3342-00-8 Cb
Cb 3342-188-3 Cb Cb315-606
Cb 327-00-45 Cb 411-00-41
Cb 407-00-1 Cb 402-93-1

(B) EQUIVALENT MATERIAL
75 C6 TO IS:2507/EN 42 J BS:970

PILOT SAMPLE SHOULD BE APPROVED BY A H S P BEFORE BULK PRODUCTION.

EST WT	TO BE STAMPED OR MARKED WHERE INDICATED THUS # (LETTERS)
0,801 Kg	

ALL SHARP EDGES AND CORNERS TO BE REMOVED UNLESS OTHERWISE STATED MACHINED CORNERS TO HAVE R OUTSIDE R INSIDE EQUIVALENT CHAMFERS ARE PERMISSIBLE

ISSUE	DATE	NATURE OF AMENDMENTS
D	15-7-15	Pt. 11 of 7th Alt. Comm. Meeting Dt. 11-4-12
C	18-3-15	Pt. 11 of 7th Alt. Comm. Meeting Dt. 11-4-12
B	16-08-10	4th Alt. Comm. Meeting Minutes Point No.12 Dt: 26-10-09
A	28.8.08	USED ON NUMBER ADDED

DRN
CHD
TCD
APPD
DATE 25-3-86
SCALE 2:1
DIMENS GIVEN IN mm
TOLERANCE ON DIMNS UNLESS OTHERWISE STATED IS : 2101-69
ALL THREADS TO CONFORM TO

MATERIAL
65G 06
GOST 6402-70

CONTROLLERATE OF INSPECTION (HEAVY VEHICLES)
AVADI

TITLE
WASHER 6T

D S CAT NUMBER

DRAWING NUMBER
353 23

COMMON TO V-92S2 & UTD-20 ENGINES

KVD NO 63632

Cb 20-01-00-8 Cb 20-06-13-6 Cb 20-23-34-86
Cb 20-06-00-2 Cb 20-16-671
Cb 20-06-12-6 Cb 20-22-00-7
Cb 20-15-663-4 Cb 20-23-33-6

(A.11)

SIZE A3

356 - 134

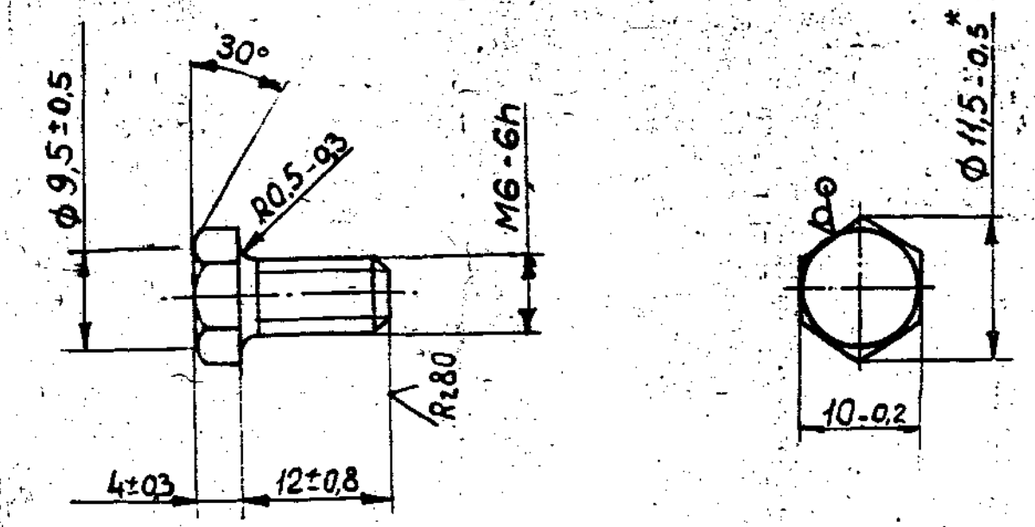

1. COATING: ZINC-PLATED, 3 MICRONS THICK, OILED.
2. OTHER TECHNICAL REQUIREMENTS ARE AS PER GOST 1759-70.
3. THREAD MAY BE MADE BY ROLLING WITH THE DIAMETER OF THE UNTHREADED PORTION BEING WITHIN THE UNITS OF THE MEAN DIAMETER OF THE THREAD.
4. *DIMENSION IS GIVEN FOR REFERENCE.

* 10-5 GOST 8560-78
45 GOST 1050-74

PILOT SAMPLE SHOULD BE APPROVED BY A H S P BEFORE BULK PRODUCTION

			EST. MASS 4832 Kg FOR 1000 PIECES	TO BE STAMPED OR MARKED WHERE INDICATED THUS ⊕ (LETTERS)
			ALL SHARP EDGES AND CORNERS TO BE REMOVED UNLESS OTHERWISE STATED MACHINED CORNERS TO HAVE R OUTSIDE R INSIDE EQUIVALENT CHAMFERS ARE PERMISSIBLE	
ISSUE	DATE	NATURE OF AMENDMENTS		
DRN		SCALE :- 2 : 1	MATERIAL :- * SEE ABOVE	USED ON :- CG 20-15-671
CHD		DIMENSIONS IN mm	CONTROLLERATE OF INSPECTION (HEAVY VEHICLES) AVADI	
TCD		TOLERANCE ON DIMNS UNLESS OTHERWISE STATED	TITLE :- BOLT M6X12	
APPD			D S CAT NUMBER	DRAWING NUMBER 356-134
DATE 25-04-87		ALL THREADS CONFORM TO		

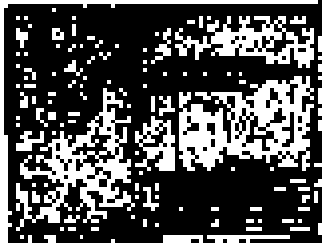

DRAWING NUMBER:
C6 20-15-671

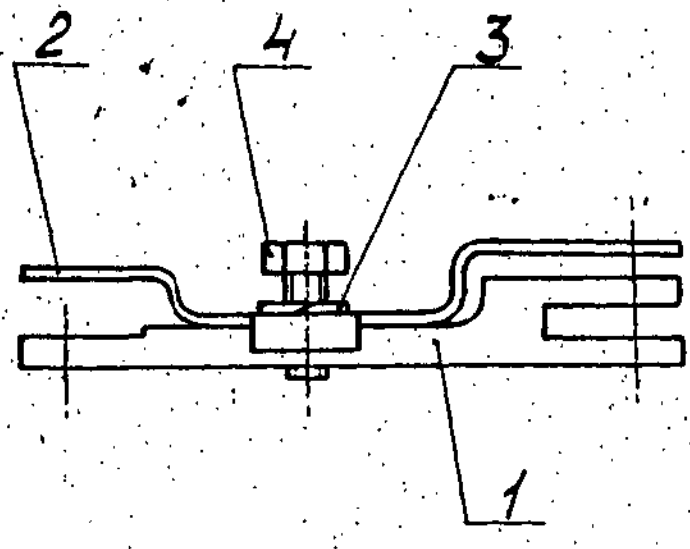

1. TIGHTEN BOLT 4 AND WASHER 3 IN THE FUEL PUMP ASSEMBLY.

PILOT SAMPLE SHOULD BE APPROVED BY A H S P BEFORE BULK PRODUCTION.

EST. WT. 0·067Kg.	TO BE STAMPED OR MARKED WHERE INDICATED THUS ⋕ (LETTERS)
ALL SHARP EDGES AND CORNERS TO BE REMOVED UNLESS OTHERWISE STATED MACHINED CORNERS TO HAVE R OUTSIDE R INSIDE EQUIVALENT CHAMFERS ARE PERMISSIBLE.	
MATERIAL:- –	USED ON C6 20 27-00-4
CONTROLLERATE OF QUALITY ASSURANCE (HEAVY VEHICLES) AVADI.	
TITLE LINK WITH PLATE	
D'S CAT NUMBER	DRAWING NUMBER C6 20-15-671

ISSUE	DATE	NATURE OF AMENDMENTS

DRN –
CHD
TCD
APPD
DATE 4·5·87
SIZE A4

SCALE:- 1:1
DIMENSIONS IN mm

TOLERANCE ON DIMENSIONS UNLESS OTHERWISE STATED IS 2102 -69

ALL THREADS CONFORM TO

USED ON	ITEM	DRAWING NUMBER	D.S. CAT. NO.	DESCRIPTION	NO. REQ.	REMARKS
		CE 20-15-671		LINK WITH PLATE		
		& ITEM LIST				
	1.	20-15-44-5		RACK LINK	1.	
	2.	20-15-685		PLATE	1	
	3.	353-23		WASHER GT. 65-G 06		
				GOST 6402-70	1.	
	4.	356-134		BOLT M6 X 12	1	

ISSUE	DATE	NATURE OF AMENDMENTS	ISSUE	DATE	NATURE OF AMENDMENTS

DRN	G. Narayanaswamy	CONTROLLERATE OF QUALITY ASSURANCE (HEAVY VEHICLES) AVADI.		
CHD	[illegible]	TITLE: LINK WITH PLATE		
TCD	G. Narayanaswamy			
APPD	V. Ramaraju	SHT. No. 1 OF 1	D S CAT NUMBER	ITEM LIST FOR CE 20-15-671
DATE	23-3-92			

DRAWING NUMBER
20-27-41-8

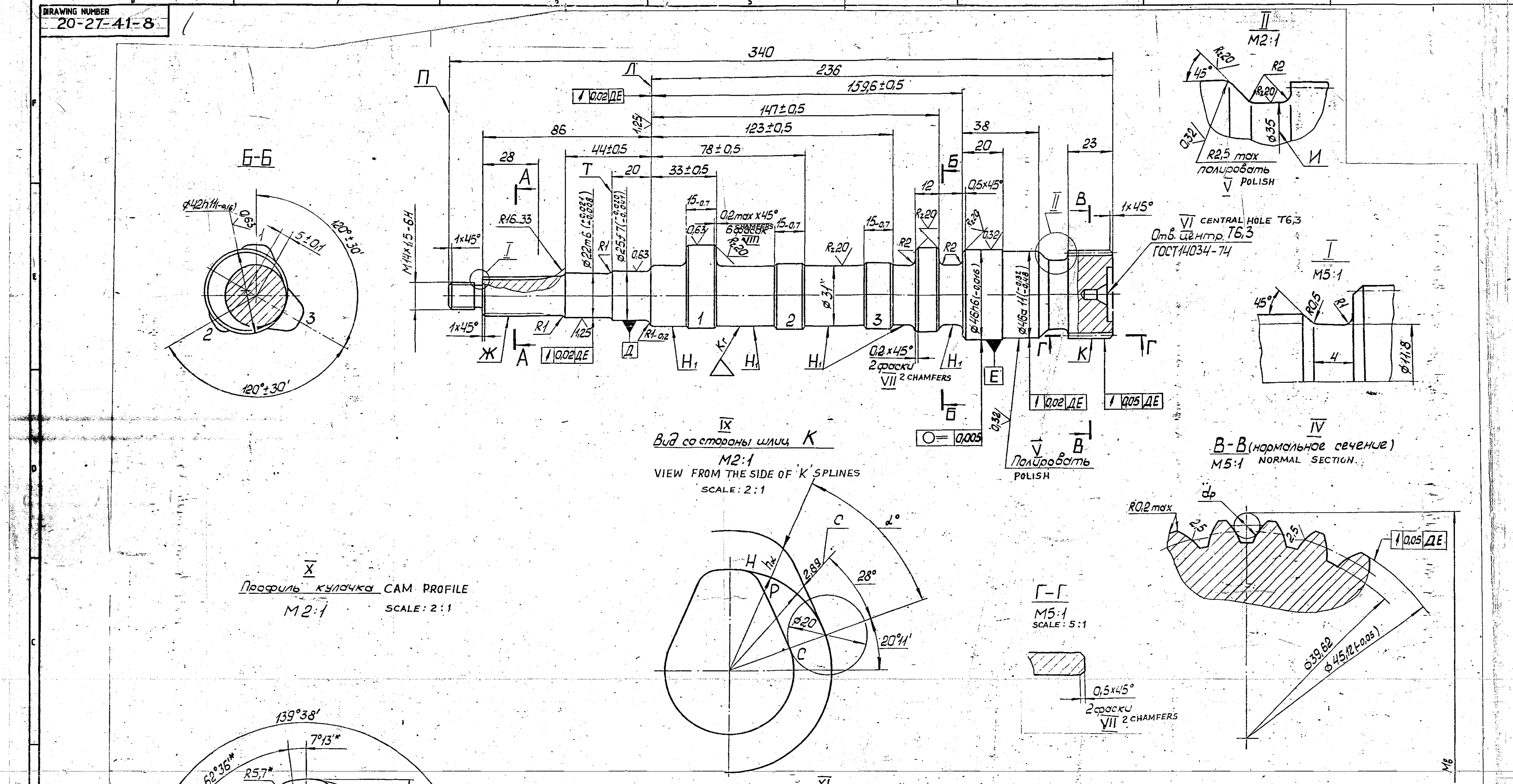

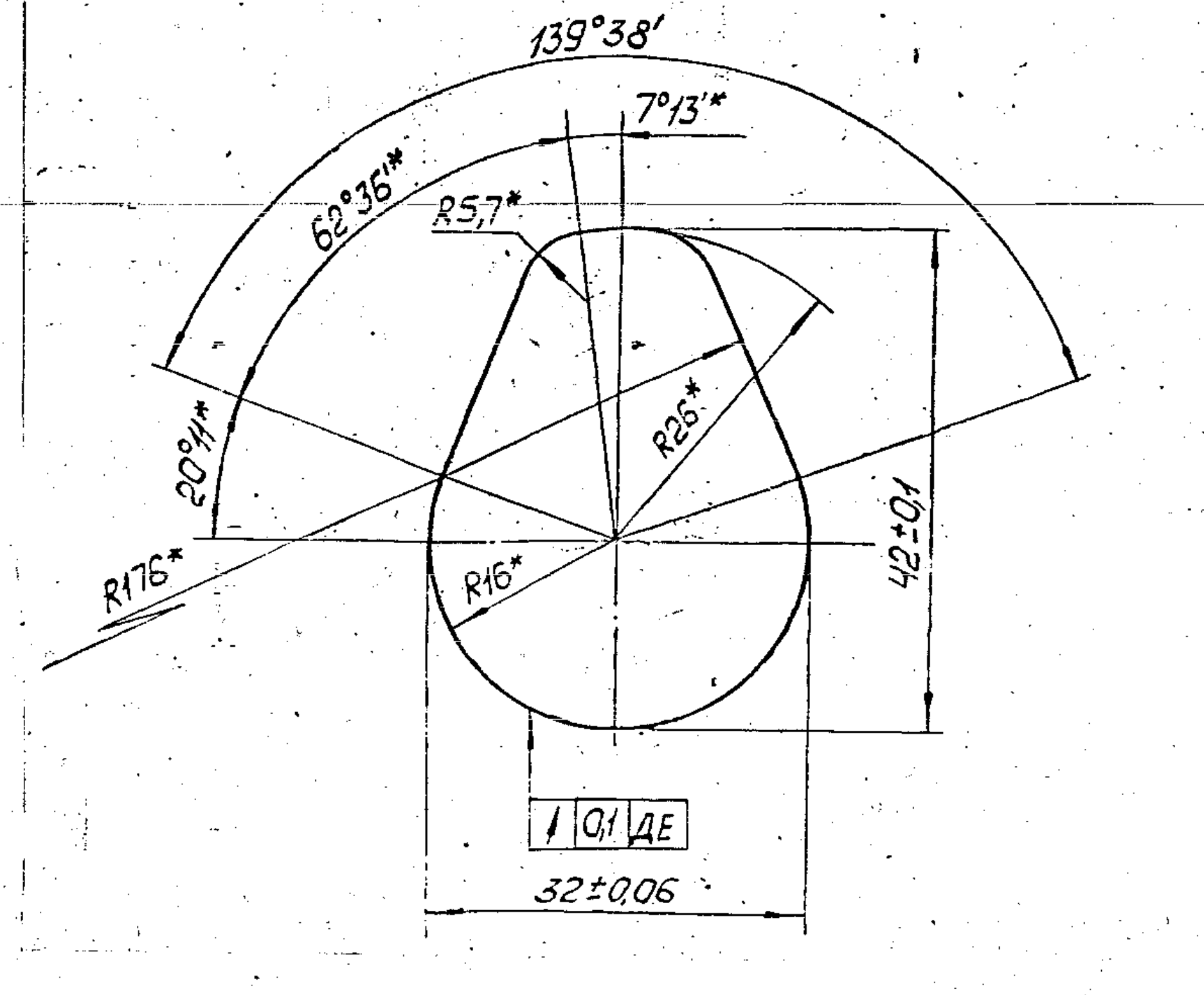

XI
Таблица подъема центра ролика ϕ 20мм
TABLE OF ROLLER CENTRE LIFT

XII	TURNING ANGLE Угол поворота α°	0	5	10	15	20	25	28	30	32	34	36	38	40	42	44	46	48	50	55	60	62°36"
XIII	Подъем центра ролика ϕ 20мм ROLLER CENTRE LIFT h_α мм	0,00	0,08	0,34	0,78	1,42	2,26	2,89	3,35	3,86	4,42	5,03	5,69	6,37	6,98	7,54	8,04	8,49	8,87	9,59	9,95	10,00

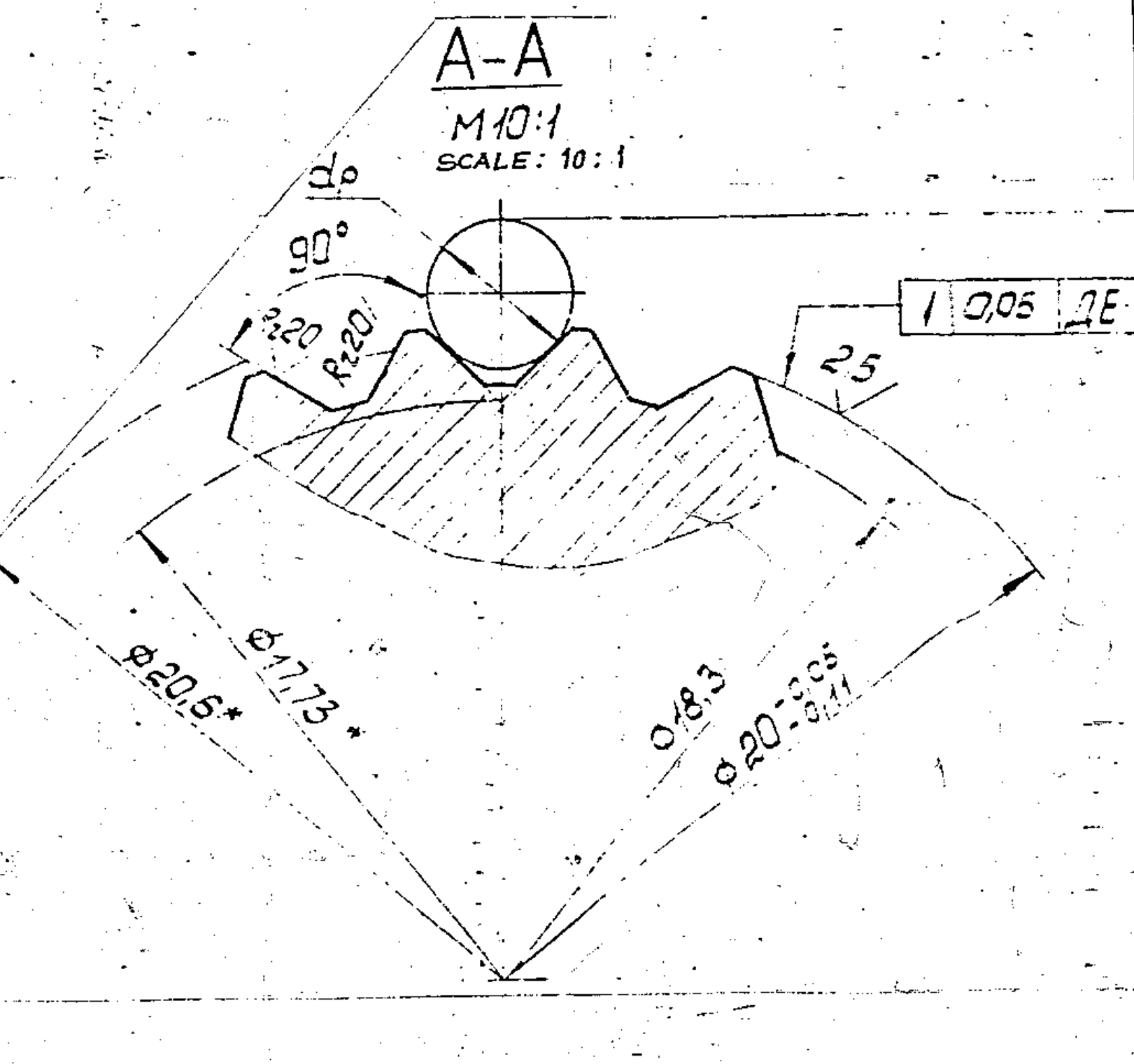

III

1. Группа контроля III по ТТ-11.
2. Цементировать h 1,3...1,7 мм (в готовом изделии), кроме резьбы и шлиц Ж. Торцы кулачков h 1,6...2 мм; шлицы К h 0,3...0,6 мм; торцы Т и Л h ≥ 0,7 мм. Цементация поверхностей Н1 И и наружных торцев не обязательна. Глубину цементации проверять на свидетелях от партии. HRC$_э$ ≥ 61 проверить на вершине каждого кулачка (на поверхности R26) и на поверхности Е перед окончательной шлифовкой. На одном валике от партии проверять твердость после окончательной шлифовки. Шлицы К-HR15 N ≥ 89.
3. В процессе термообработки деталь должна быть обработана холодом по инструкции И 170-3/63.
4. Микроструктура цементированного слоя: должна представлять собой мелкоигольчатый мартенсит не крупнее балла 4 по шкале 3 ГОСТ 8233-56; карбидная сетка не выше балла 4 по шкале 5 ГОСТ 8233-56.
Проверку производить по инструкции ЦЗЛ.
5. Неуказанные предельные отклонения размеров: Н14; h14;
6. Профиль кулачка на участке СРН проверять по инструкции ИВ20-32. Отклонение от номинальных величин подъема центра ролика не более 0,1 мм; для двух смежных замеров - 0,05 мм.
7. Допуск на расположение кулачков дан для подъема ролика С.
8. Допуск параллельности образующих профиля кулачка относительно оси поверхностей Д и Е 0,015 мм по ширине кулачка на участке α=30°...62°36', допускается проверка в центрах.
9. Накопленная погрешность шага шлицев К и отклонения направления зуба от заданного угла винтовой линии в сумме не более 0,06 мм; проверять комплексным калибром на расположение шлицев.
Допускается контроль шлицев производить другими средствами измерения при условии обеспечения степени точности проверки, соответствующей комплексному калибру.
10. Положение вершины эксцентрика произвольное.
11. Допускается центровое отверстие со стороны торца П выполнять не более А3 ГОСТ 14034-74.
12. Деталь проверять на магнитном дефектоскопе по инструкции ИВ 20-17.
13. Покрытие: Кд. 9 хр. (только для шлиц Ж).
14. * Размеры для справок.

XIV

GEAR REAM	Зубчатый венец	—	Ж	К
NORMAL MODULE	Модуль нормальный	m		1,5
No. OF TEETH	Число зубьев	z	24	28
COIL PITCH	Шаг спирали	—		720
HELICAL LINE ANGLE	Угол винтовой линии	—		10°33'23"
COIL DIRECTION	Направление спирали	—		левое LEFT-HAND ONE
ENGAGEMENT ANGLE	Угол зацепления	—		30°
DIAMETER OF ROLLERS	Диаметр роликов	dp	2,311	2,595
DIMENSIONS BY ROLLERS	Размер по роликам	MB	$23,31^{-0,05}_{-0,13}$	$46,38^{-0,33}_{-0,43}$
TOOTH WIDTH ACC. TO GEAR TOOTH GAUGE	Толщина зуба по зубомеру	—		$2,35^{-0,22}_{-0,28}$
TOOTH HEAD HEIGHT ACC. TO GEAR TOOTH GAUGE.	Высота головки зуба по зубомеру			1,245
REFERENCE DIAMETER	Диаметр делительной окружности	dа	$19,02^{-0,08}_{-0,18}$	42,72

III. 1. Control group III according to Spec.-11.
2. Carburize h 1,3...1,7 mm (in final product) except the thread and splines Ж. The faces of cams h 1,6...2 mm, splines K h 0,3...0,6 mm; faces T and Л h ≥ 0,7 mm. Carburizing of surfaces H1 И and outer faces is not obligatory. Check the carburizing depth on the specimens of the set. Check HRC$_э$ ≥ 61 on the top of each cam; on the surface of R26 and on E surface before the final grinding. Check the hardness of a shaft of the set after the final grinding. Splines K-HR15 N ≥ 89.
3. During the thermal treatment the part should be treated with cold according to instruction И 170-3/63.
4. The microstructure of the carburized layer should represent small needle-type martensite of four numbers max according to scale 3 of GOST 8233-56; carbidic grid of four numbers max according to scale 5 of GOST 8233-56.
Check according to the instruction of central plant laboratory.
5. Non-indicated limit deviations of dimensions: H14, h14.
6. Check the cam profile on section C,P,H according to instruction ИВ 20-32. The deviation from the nominal values of the roller centre lift is 0,1 mm max, for two adjacent measurings is 0,05 mm.
7. The allowance for the displacement of the cams is given for the lift of roller C.
8. Parallelism allowance of the profile generatrix of the cam relative to the axis of surfaces Д and E is 0,015 mm along the cam width on the section α=30°...62°36', it is allowed to check in the centres.
9. The common error of the pitch of splines K and the deviations of tooth direction from the given angle of helicoidal line together are 0,06 mm max; check it for the splines' displacement with the complex calibre.
It is allowed to control the splines with another methods of measuring on condition of providing the control accuracy degree corresponding to the complex calibre.
10. The eccentric top position is arbitrary.
11. It is allowed to make the central hole from face П side of A3 max to GOST 14034-74.
12. Check the part with magnetic flaw detector according to instruction ИВ 20-17.
13. Coating: Cadm.9 chrom.(splines Ж only)
14. *Reference dimensions.

PILOT SAMPLE SHOULD BE APPROVED BY A H S P BEFORE BULK PRODUCTION.

EST. MASS	TO BE STAMPED OR MARKED WHERE INDICATED THUS ⊕ LETTERS)
2,3 Kg.	

ALL SHARP EDGES AND CORNERS TO BE REMOVED UNLESS OTHERWISE STATED MACHINED CORNERS TO HAVE R OUTSIDE R INSIDE EQUIVALENT CHAMFERS ARE PERMISSIBLE.

ISSUE	DATE	NATURE OF AMENDMENTS

DRN	
CHD	
TCD	
APPD	
DATE	16-2-93
SCALE	1:1

DIMENSIONS IN mm.
TOLERANCE ON DIMNS UNLESS OTHERWISE STATED IS 2102-69
ALL THREADS TO CONFORM TO

MATERIAL :- 12ХН3А ТУ 14-1-381-72
USED ON :- СБ 20-27-04-5

CONTROLLERATE OF QUALITY ASSURANCE (HEAVY VEHICLES)
AVADI

TITLE
FUEL PUMP SHAFT

D S CAT NUMBER

DRAWING NUMBER
20-27-41-8

DRAWING NUMBER
СБ 20-27-04-6

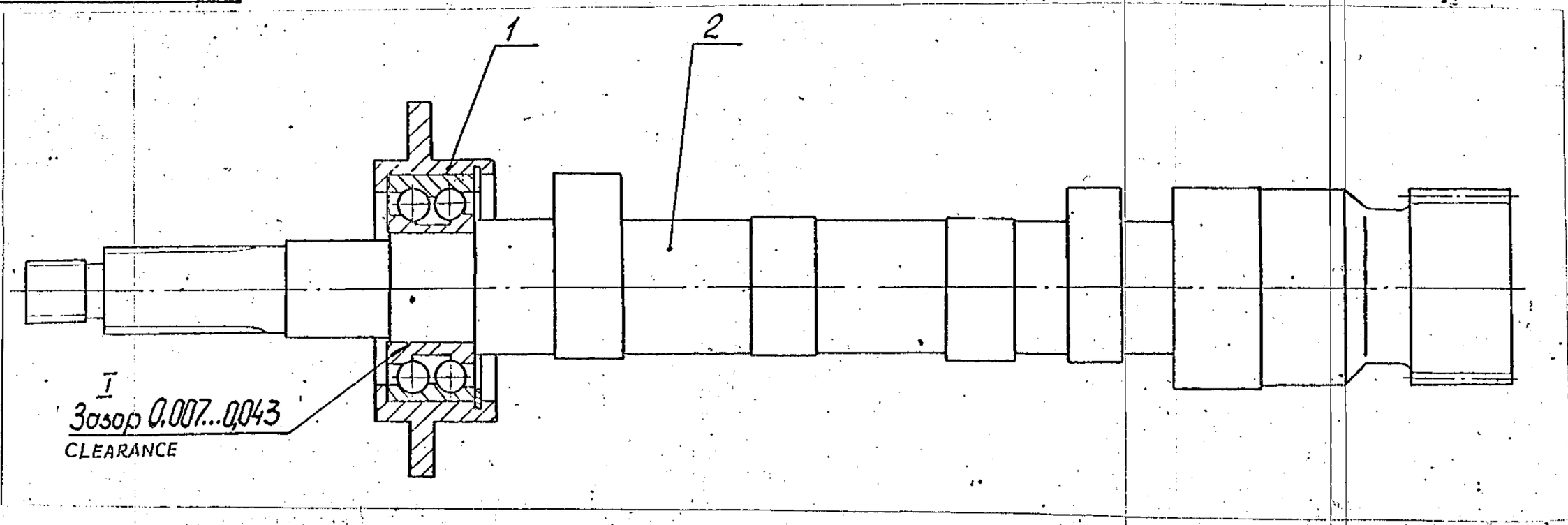

DRG. INTRODUCED BASED ON NOTN. 1677-85 9

DRG. INDIANISED BASED ON RUSSIAN ORIGINAL ISSUE-NIL

PILOT SAMPLE SHOULD BE APPROVED BY A H S P BEFORE BULK PRODUCTION

EST. WT. 2.74 Kg.

TO BE STAMPED OR MARKED WHERE INDICATED THUS # (LETTERS)

ALL SHARP EDGES AND CORNERS TO BE REMOVED UNLESS OTHERWISE STATED MACHINED CORNERS TO HAVE R OUT SIDE R INSIDE EQUIVALENT CHAMFERS ARE PERMISSIBLE.

ISSUE	DATE	NATURE OF AMENDMENTS

DRN	
CHD	
TCD	
APPD	
DATE	16-2-93
SCALE:-	1:1

DIMENSIONS IN mm
TOLERANCE ON DIMNS UNLESS OTHERWISE STATED IS:2102-69
ALL THREADS TO CONFORM TO

MATERIAL:- —

USED ON СБ 20-27-00-4

CONTROLLERATE OF QUALITY ASSURANCE(HEAVY VEHICLES) AVADI

TITLE ASSY. FUEL PUMP SHAFT

D S CAT NUMBER

DRAWING NUMBER СБ 20-27-04-6

SIZE A3

USED ON	ITEM	DRAWING NUMBER	D S CAT NUMBER	DESCRIPTION	No. OFF	REMARKS
CБ 20-27-00-4	-	CБ 20-27-04-6		ASSY. FUEL PUMP SHAFT.		
		& ITEM LIST				
	1	CБ 20-27-27-2		ASSY. THRUST BEARING		
		& ITEM LIST		SLEEVE.	1	
	2	20-27-41-8		FUEL PUMP SHAFT	1	

I/L CREATED BASED ON RUSSIAN ORIGINAL ISSUE-NIL, NOTN.NO. 1677-85 ∋

ISSUE	DATE	NATURE OF AMENDMENTS	ISSUE	DATE	NATURE OF AMENDMENTS

DRN		CONTROLLERATE OF QUALITY ASSURANCE (HEAVY VEHICLES) AVADI.
CHD		TITLE: ASSY. FUEL PUMP SHAFT
TCD		
APPD		SHT. No. 1 OF 1 / D S CAT NUMBER / ITEM LIST FOR CБ 20-27-04-6
DATE	16-2-93	

DRAWING NUMBER
20-06-144-2

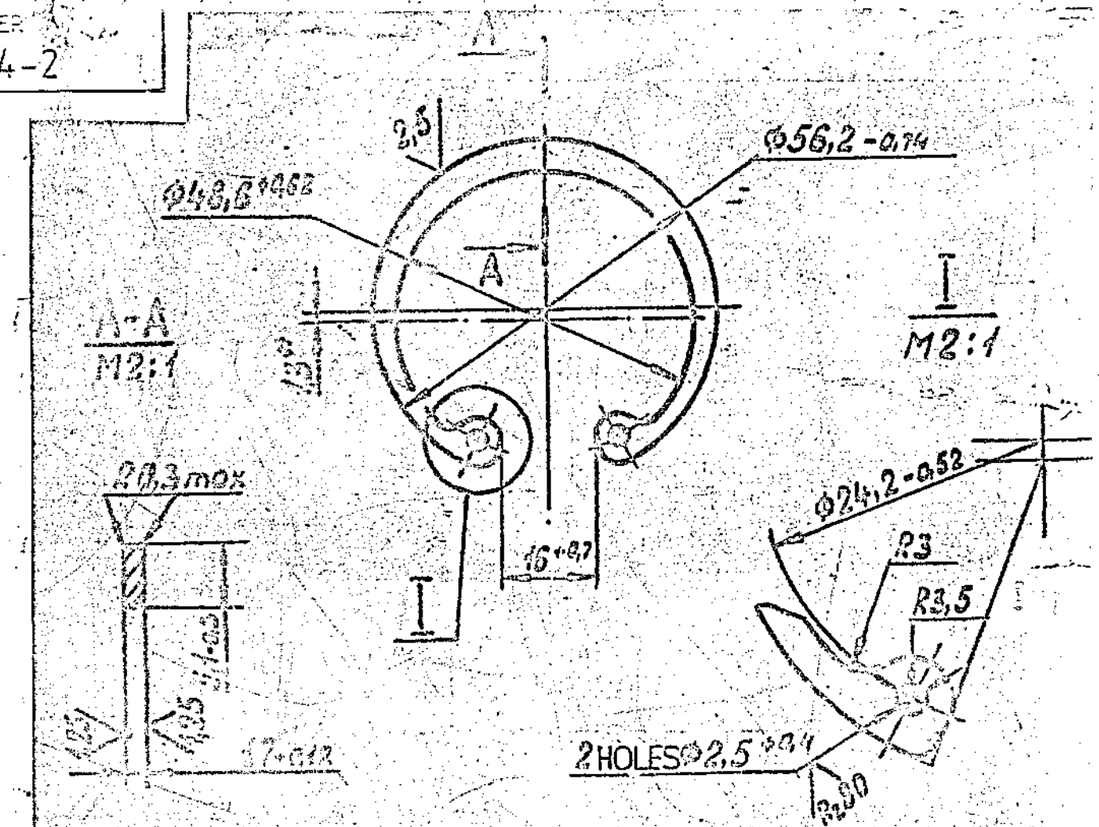

1. INSPECTION GROUP IV AS PER TECHNICAL REQUIREMENTS TT-11.
2. TECHNICAL REQUIREMENTS ARE AS PER GOST 13944-68
3. CHAMFER 0.3×45° MAY BE MADE INSTEAD OF RADIUS R0.3 MAX.
4. * DIMENSION IS GIVEN FOR REFERENCE.
5. COATING: CHEMICALLY OXIDIZED, OILED.
6. APPLY STAMP ONTO THE TAG (PART 540-551) FOR BATCH OF PARTS. *
65Г GOST 14959-79

EXPLANATORY NOTE :

7. REFERENCE MATERIAL QUOTED :

a) HOT ROLLED CARBON AND ALLOY STEEL TO GRADE 65Г

(65 - AVERAGE CARBON CONTENT BY Wt AS A PERCENTAGE

Г MANGANESE - MAIN ALLOY)

b) CHEMICAL COMPOSITION :

CARBON %	SILICON %	MANGA-NESE %	CHROMIUM (max)	COPPER (max)	NICKEL (max)	PHOSPH-ORUS(MAX)	SULPHUR (max)
0.62-0.70	0.17-0.37	0.90-1.20	0.10	0.20	0.15	0.035	0.035

C) PHYSICAL PROPERTIES :

(i) YIELD POINT - 80 Kgf/mm² (min)

(ii) ULTIMATE TENSILE STRENGTH :- 100 Kgf/mm² (min)

(iii) RELATIVE ELONGATION % - 8 (min)

(iv) RELATIVE REDUCTION % - 30 (min)

(A)
EQUIVALENT MATERIAL
75 C6 TO IS:2507/EN 42 J BS:970

* CB 20-06-21-2
* Cb 20-06-21-2

DRN		MATERIAL :- 65 Г GOST 14959-79	USED ON * * CB 20-27-27-* 2	
CHD				
TCD				
APPD				
DATE	24-4-87	CONTROLLERATE OF QUALITY ASSURANCE(HEAVY VEHICLES) AVADI		
SCALE	1 : 1			
DIMENSIONS IN mm		TITLE RING (Б 52 GOST 13943-79)		
TOLERANCE ON DIMNS UNLESS OTHERWISE STATED IS:2102-69				
ALL THREADS TO CONFORM TO		D S CAT NUMBER	DRAWING NUMBER 20-06-144-2	

PILOT SAMPLE SHOULD BE APPROVED BY A H S P BEFORE BULK PRODUCTION

EST. WT. 0.008 Kg

TO BE STAMPED OR MARKED WHERE INDICATED THUS ⫩ (LETTERS)

ALL SHARP EDGES AND CORNERS TO BE REMOVED UNLESS OTHERWISE STATED MACHINED CORNERS TO HAVE R OUT SIDE R INSIDE EQUIVALENT CHAMFERS ARE PERMISSIBLE

ISSUE	DATE	NATURE OF AMENDMENTS
A	16-08-10	4th Alt. Comm. Meeting Minutes Point No.12 Dt:26-10-09

KVD No. 63049

SIZE A3

DRAWING NUMBER
20 - 27 - 35 - 4

Рис.1 (VII)
FIG. 1

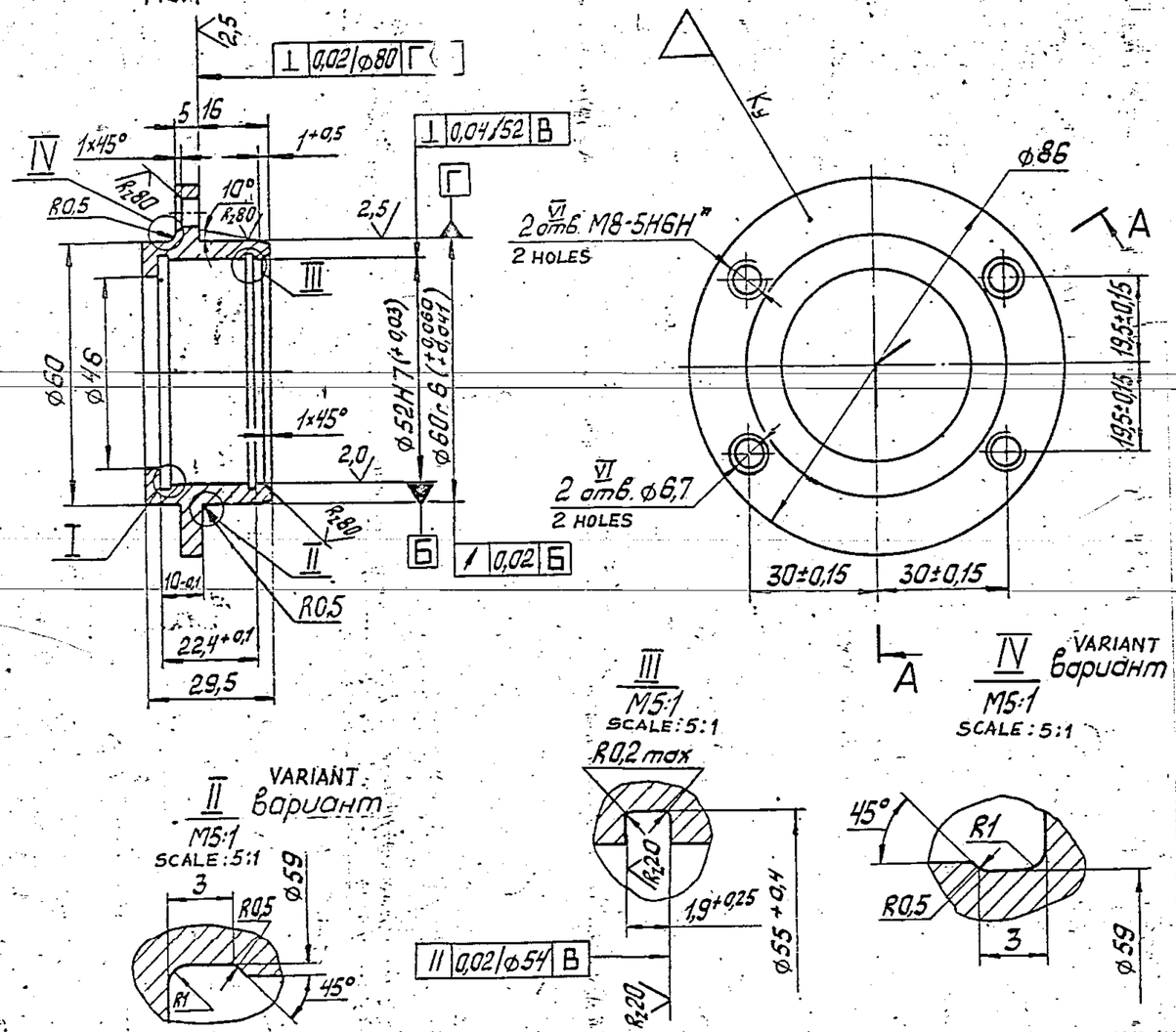

I
M5:1 SCALE: 5:1

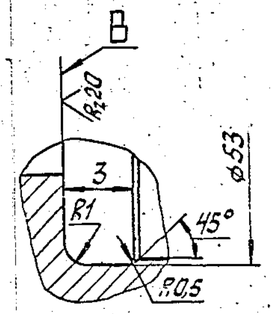

II VARIANT вариант
M5:1 SCALE: 5:1

III
M5:1 SCALE: 5:1

IV VARIANT вариант
M5:1 SCALE: 5:1

V

Заменитель материала - сталь 40Х ГОСТ 4543-71.

2. Неуказанные предельные отклонения размеров: H14, h14, ± JT14/2.

3. Покрытие: Хим. Окс. прм.

4. *Для крепления съемника.

V. 1. Material substitute is steel 40X GOST 4543-71.
2. Non-indicated limit deviations of dimensions: H14, h14, ±JT14/2.
3. Coating: Chem.Oxid.ind.
4. *For stripper fastening

Рис.2 (VII)
FIG. 2

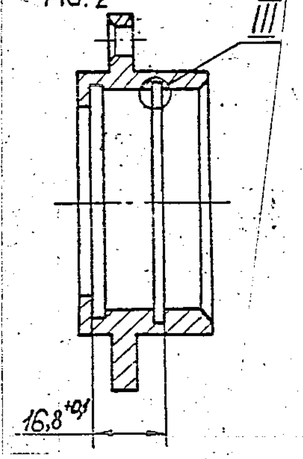

VIII

Обозначение	Рис.	Примечание
20-27-35-4	1	
-01	2	Для запчастей

DESIGNATION	FIG.	REMARK
20-27-35-4	1	
-01	2	FOR SPARES

PILOT SAMPLE SHOULD BE APPROVED BY A H S P BEFORE BULK PRODUCTION.

EST. WT. 0.25 Kg. | TO BE STAMPED OR MARKED WHERE INDICATED THUS # (LETTERS)

ALL SHARP EDGES AND CORNERS TO BE REMOVED UNLESS OTHERWISE STATED MACHINED CORNERS TO HAVE R OUTSIDE R INSIDE EQUIVALENT CHAMFERS ARE PERMISSIBLE.

ISSUE	DATE	NATURE OF AMENDMENTS

DRN		MATERIAL :- 45X GOST 4543-71
CHD		USED ON :- СБ 20-27-27-2
TCD		
APPD		CONTROLLERATE OF QUALITY ASSURANCE (HEAVY VEHICLES) AVADI
DATE	16-2-93	
SCALE :- 1:1		
DIMENSIONS IN mm.		TITLE THRUST BEARING SLEEVE
TOLERANCE ON DIMNS UNLESS OTHERWISE STATED IS 2102-69		
ALL THREADS TO CONFORM TO		D S CAT NUMBER
		DRAWING NUMBER 20-27-35-4

DRAWING NUMBER
СБ 20-27-27-2

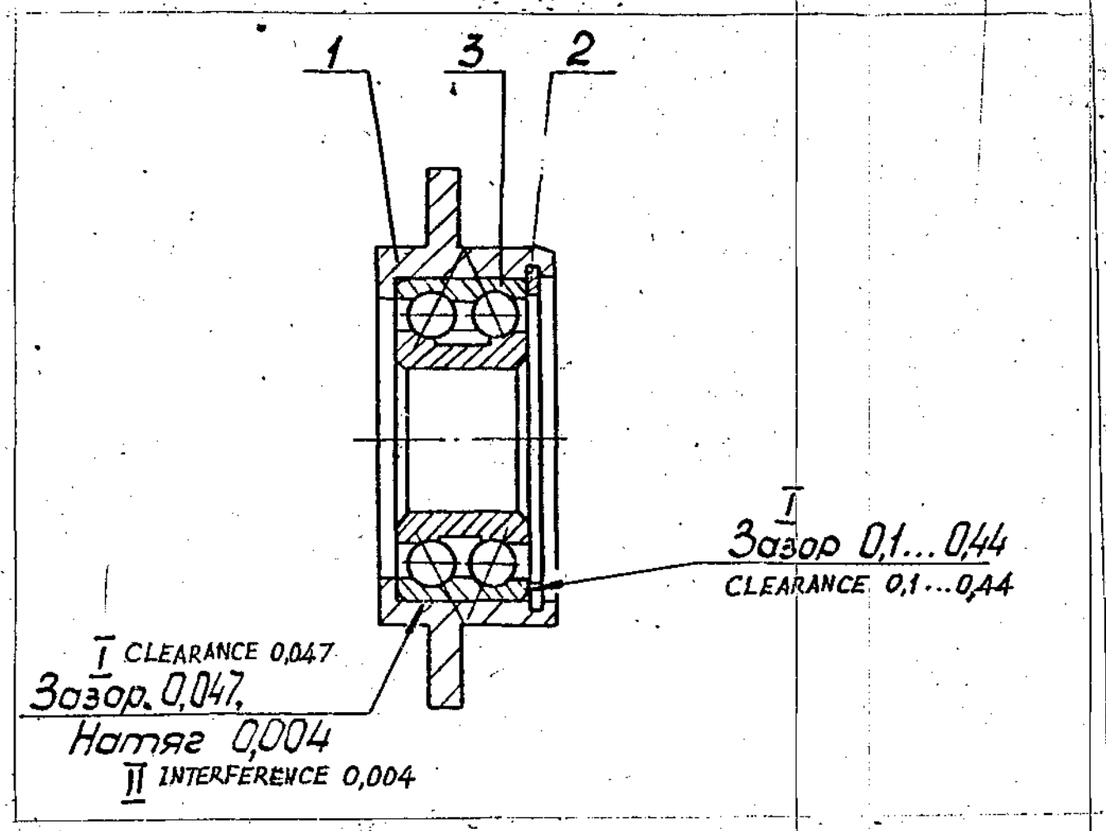

DRG. INTRODUCED BASED ON NOTN. 1677-85Э

DRG. INDIANISED BASED ON RUSSIAN ORIGINAL ISSUE - NIL.

PILOT SAMPLE SHOULD BE APPROVED BY A H S P BEFORE BULK PRODUCTION

EST. WT. 0,44 Kg.

TO BE STAMPED OR MARKED WHERE INDICATED THUS # (LETTERS)

ALL SHARP EDGES AND CORNERS TO BE REMOVED UNLESS OTHERWISE STATED MACHINED CORNERS TO HAVE R OUT SIDE & INSIDE EQUIVALENT CHAMFERS ARE PERMISSIBLE

ISSUE	DATE	NATURE OF AMENDMENTS

DRN	
CHD	
TCD	
APPD	
DATE	16-2-93
SCALE:-	1:1
DIMENSIONS IN mm TOLERANCE ON DIMNS UNLESS OTHERWISE STATED IS:2102-69	
ALL THREADS TO CONFORM TO	—

MATERIAL:- —

USED ON СБ 20-27-04-6

CONTROLLERATE OF QUALITY ASSURANCE(HEAVY VEHICLES) AVADI

TITLE ASSY. THRUST BEARING SLEEVE

D S CAT NUMBER

DRAWING NUMBER СБ 20-27-27-2

SIZE A3

USED ON	ITEM	DRAWING NUMBER	D S CAT NUMBER	DESCRIPTION	No. OFF	REMARKS
CБ 20-27-01-6		CБ 20-27-27-2		ASSY. THRUST BEARING SLEEVE		
		& ITEM LIST				
	1	20-27-35-4		THRUST BEARING SLEEVE	1	
	2.	20-06-144-2		RING Б-52 GOST 13943-68	1	
	3	WITHOUT DRG.		BEARING 3056205		
				GOST 4252-75.	1	

NOTN. No. 1677-859

ORIGINAL ISSUE - NIL

PRINTED BASED ON RUSSIAN

S1 Sadin CO 20-27-27-1

ISSUE	DATE	NATURE OF AMENDMENTS	ISSUE	DATE	NATURE OF AMENDMENTS

Alsaker

Alsaker

16-2-93

CONTROLLERATE OF QUALITY ASSURANCE (HEAVY VEHICLES) AVADI

TITLE: ASSY. THRUST BEARING SLEEVE

SHT. No. OF

D S CAT NUMBER

ITEM LIST FOR CБ 20-27-27-2