~~PROVISIONAL~~ JWM/ODC

ASSEMBLY DRAWING OF

GLASS WITH 4mm THICK U-TYPE RUBBER BEADING

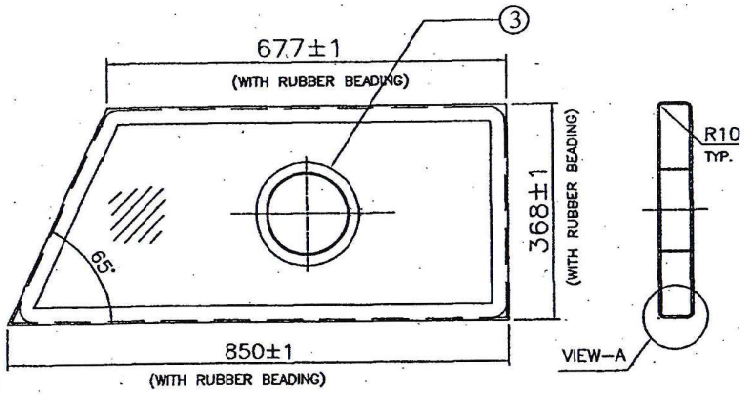

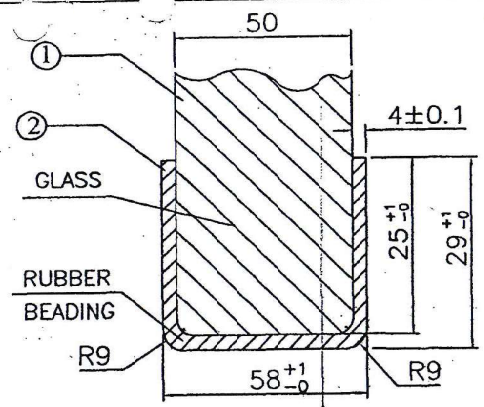

ENLARGED VIEW-A

QTY./VEH= 1 NO.

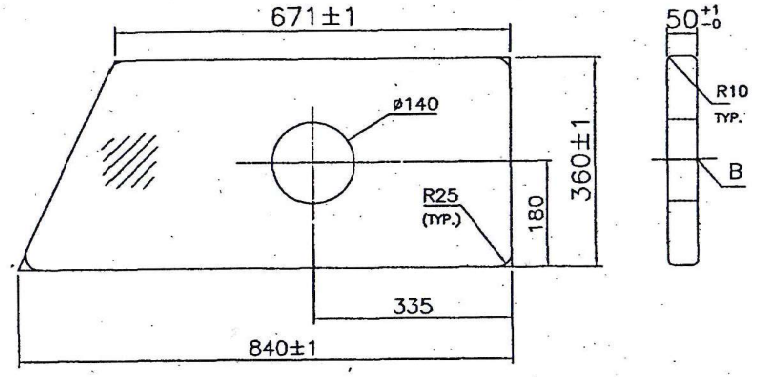

GLASS DRAWING

NOTE:

8. LENGTH OF THE RUBBER BEADING SHOULD BE AS PER PERIMETER OF B.P. GLASS AND HOLE 140ø FOR WHICH RUBBER BEADING IS GIVEN AND CORNER BENDS ARE TO BE MAINTAINED AS PER GLASS PROFILE AND RADII.
9. RUBBER MATERIAL SHOULD SATISFY THE REQUIRED PROPERTIES AT THE TIME OF RECEIPT
10. PROPERTIES OF THE MATERIAL:
    a) TYPE OF RUBBER : NEOPRENE (OR) EPDS
    b) SHORE HARDNESS : 60±5 AT THE TIME OF RECEIPT.
    c) TENSILE STRENGTH : 70 + 5 KG/sq. cm.
    d) ELONGATION : 300 % + 10 % min
    e) POLYMER CONTENT : 60 % min.
11. SPLINTER PROOF MATERIAL TO BE PROVIDED ON SURFACE "B" (AS SHOWN IN DWG.) SO AS TO MOUNT THE GLASS ON LEFT SIDE OF THE VEHICLE.

NOTE:

1. ALL DIMENSIONS ARE IN MM.
2. TOLERANCE ON UNSPECIFIED DIMENSIONS ARE ±1 mm.
3. REFER ANNEXURE – B FOR MATERIAL AND OTHER DETAILS.
4. B.P. GLASS TO BE SUPPLIED ALONG WITH U-TYPE RUBBER BEADING OF 4mm THICK DULY MOULDED ALONG PROFILE OF THE GLASS.
5. GLASS SHOULD GIVE PROTECTION AGAINST 6 ROUNDS OF FIRE WITH 7.62 SLR FROM 10 MTRS. DISTANCE.
6. GLASS SHOULD BE SPLINTER PROOF TYPE.
7. THE CROSS SECTION OF THE RUBBER BEADING SHOULD BE AS SHOWN IN THE DRAWING.

ITEM	DESCRIPTION	NO.OFF	MATL	TREAT/SIZE	REMARKS
3	RUBBER BEADING FOR HOLE	1		58x15x4t	
2	RUBBER BEADING OUTER	1		58x29x4t	
1	CO-DRIVER SIDE GLASS	1		840x360x50t	

UPGRADED MPV 4X4

DIR/ODC
WM/ODC
JWM/ODC
DRN
CKD

INDEX	ALTERATION	SIGN	DATE	ALTERNATE NOTE	MODEL APPLICABLE

DIMS.	TOL.
0 - 30	±0.1
30-250	±0.2
250-800	±0.3
800-2000	±0.5
>2000	±0.8
GEN.TOL.	

CO-DRIVER SIDE GLASS (WITH RUBBER BEADING) FOR UPGRADED MPV 4x4

645-10-1013-(I) REF.DRG. NO.

1:1 SCALE

REPLACED BY

23.03.18 DATE

REPLACEMENT FOR

ODC

VEHICLE FACTORY JABALPUR

DRG.NO. 2669-57-31

1/1 SHT.

तकनीकी सेवा अनुभाग
TECHNICAL SERVICES SECTION
वाहन निर्माणी जबलपुर
Vehicle Factory, Jabalpur
प्रमाणित सत्य प्रतिलिपि
CERTIFIED CORRECT COPY
की जारी / Issued to JWM/VMM-1
दि / on 11.03.2022
कार्य प्रबंधक / टी एस एस
JWM/TSS

C/s