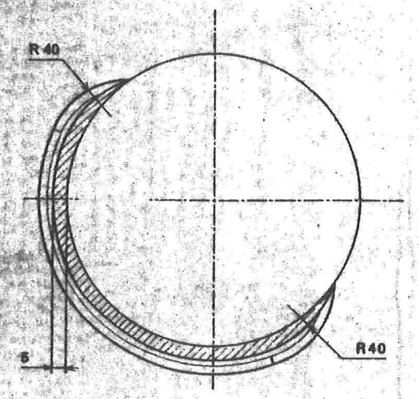

A-A

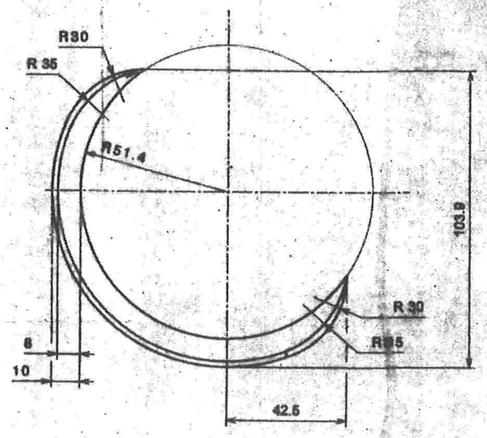

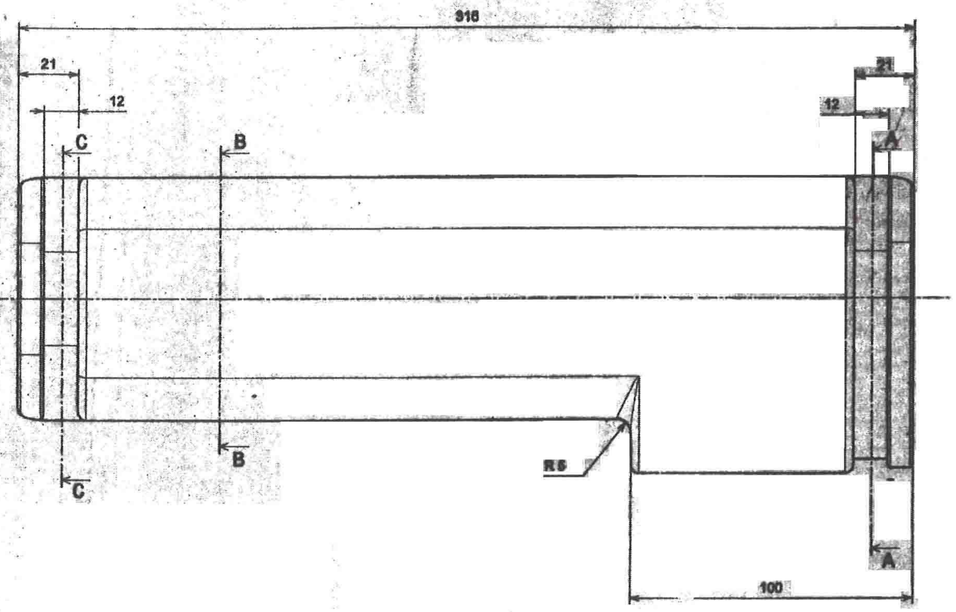

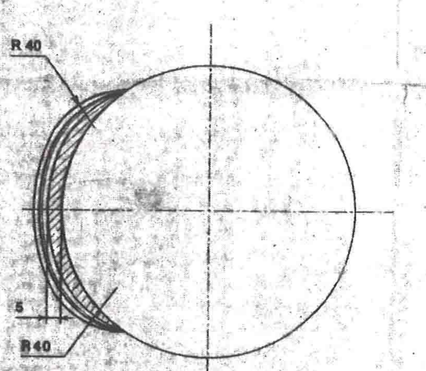

C-C

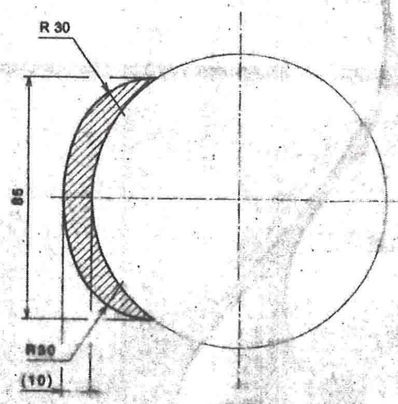

B-B

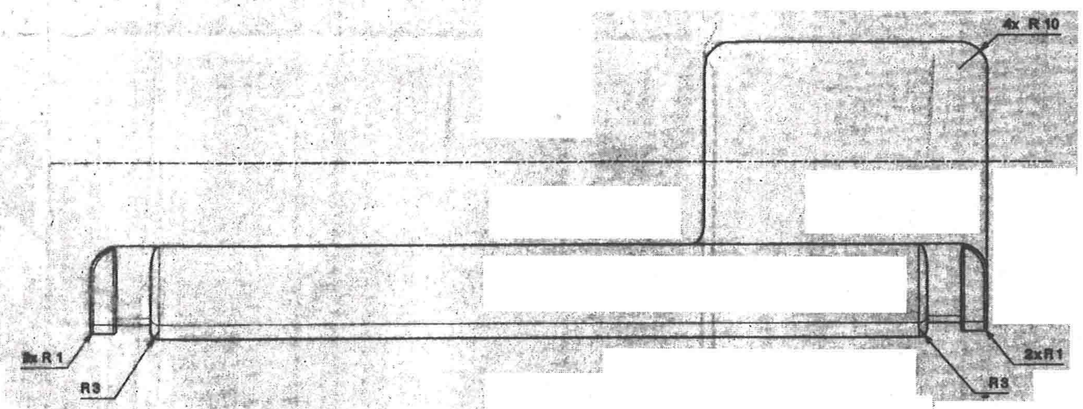

ORIGINAL SIZE A1

29-04-15	134-01-W	DRG SEALED.	
02-03-15		SCANNED & PRINTED WITHOUT CHANGE	
DATE	AUTHORITY	AMENDMENTS	

PREV DC

DRG SEALED: 134-01-W DT. 29-4-15 | SCANNED/MK | CHECKED: G.S.N.

C.Q.A (W), JABALPUR

Se not / See note *)

Se not / See note *)

1:1

DIMENSIONS AFTER SURFACE TREATMENT

ISO 1101

ISO 2768-mK

Anders Kåhrs 2010-10-13

Sebastian Hakanen 2010-10-29

AUTHORIZED

COMPANY RESTRICTED

Face pad

304053433

FFV Ordnance AB

Se numerisk modell / 304009743
See numerical model / 304009743

*) Material: Mikrocellulärt integralskum Elastofoam 4203/106
Densitet 0.5-0.6 g/cm³ Kulör:Mörgrön
Utvändigt svagt blästermönstrad
Reflexhämmande
Skågghöjd enl ISO 3302-1/Amd 1 klass 3

Material: Microcellular structural foam Elastofoam 4203/106
Density 0.5-0.6 g/cm³ Colour: Olive drab
Outside with slight blast pattern
Reflex inhibition
Burr height to ISO 3302-1/Amd 1 class 3

नियंत्रित
UNCONTROLLED