DRAWING CONVENTIONS CONFORM TO IS:
DIMNS ARE IN m.m. UNLESS OTHERWISE STATED
GEN. TOL. MEDIUM/ CLASS TO IS: 2102

PART No.
DET No. 12 | SHTS. | SHTS. No.
DRG. No. ARDE 2139

NOTES:- 1) ALL SHARP EDGES & BURRS ARE TO BE REMOVED.
2) TOL. FOR ANGLE ± 30'

(16)

RIBS	LENGTH
FRONT RIB	140·0
MIDDLE RIB	150·0
REAR RIB	160·0

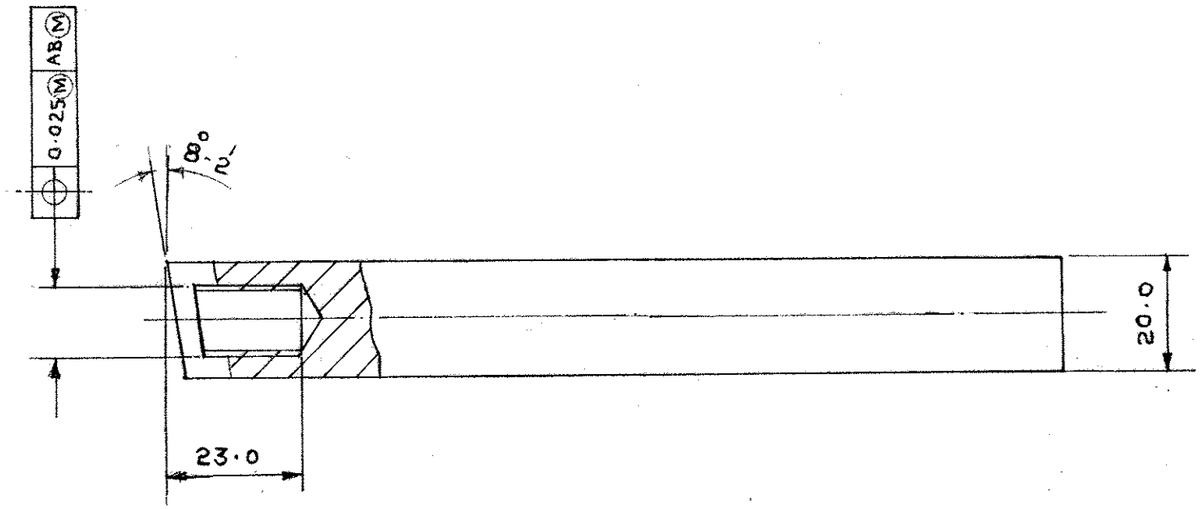

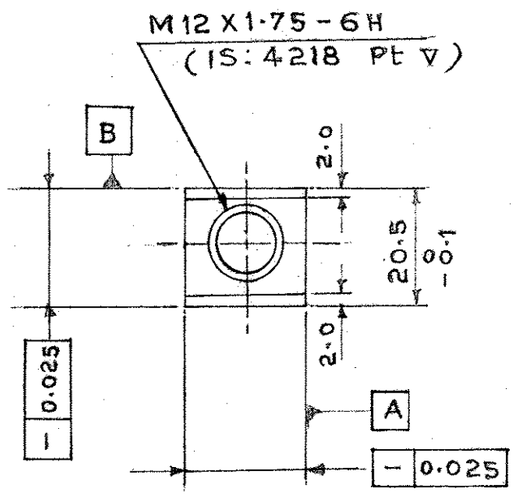

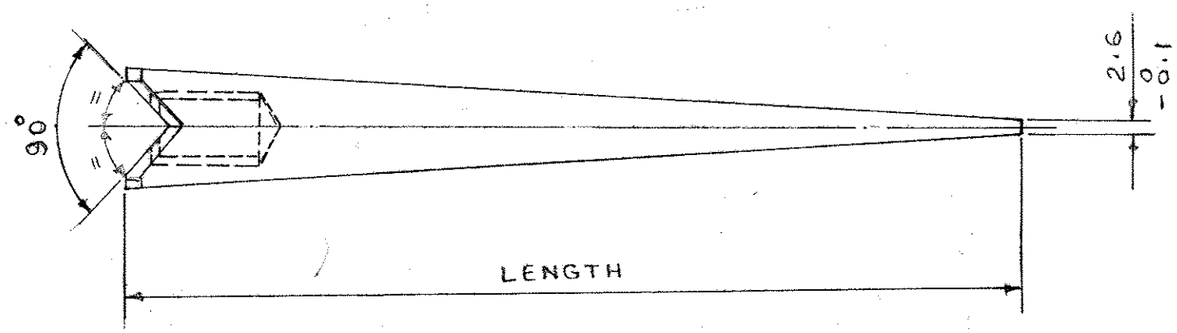

R. NO.	DATE:	AUTHORITY	BRIEF RECORD	ZONE	CD	GO
					SIGN	

DRG SEALED (PROV) CRE (AA) 16-10-92

DRN. SKK | CHD. | TRD. GNG | COMP.
CD | PASSED | SCALE: NTS | EST MASS:
APPROVED (R PERUMAL) Sc 'D' FOR DIRECTOR | GAUGE SCHD: | DATE: 7-5-90
MATL: STEEL TO IS: 961-1975 FC 540 W-HT
PROTECTIVE FINISH: PHOSPHATED TO IS: 3618 CLB'

ASSY DRG. ARDE 2139/11
DESIGN AUTHORITY
ARDE PUNE - 411021

DRG. No. ARDE 2139
DET. No. 12 | SHTS. | SHT. No.
PART No.
D. S. CAT. No.
A.H.S.P.

TITLE:

RIB

GATEWAY
GATEWAY