D.S.CAT. NO. 1005-007081

DIMNS. ARE IN mm.

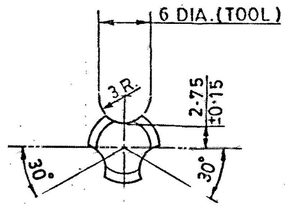

SCALE:- 2:1

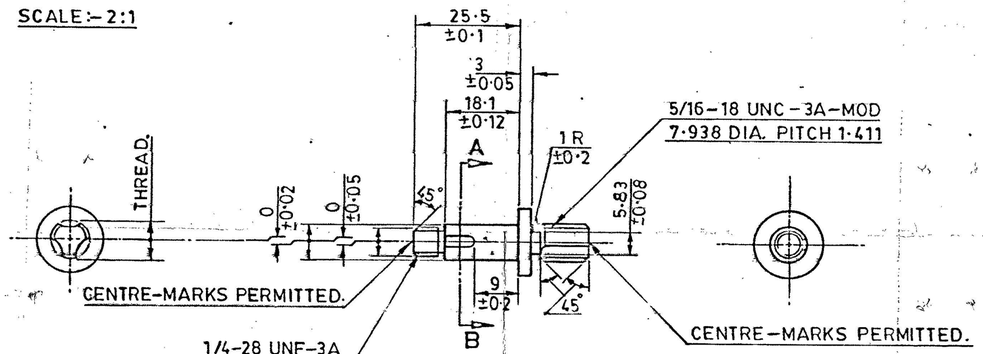

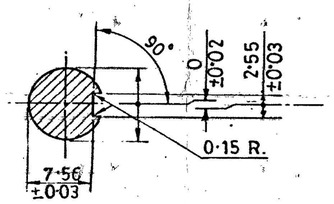

SECTION A-B

SCALE:- 2:1

NOTE

ACCEPTANCE STANDARDS FOR MACRO ETCH TEST AND MICROSCOPIC DETERMINATION OF NON-METALLIC INCLUSIONS FOR STEEL.

I) MACRO ETCH TEST AS PER ASTME 381 WITH ACCEPTANCE STANDARD AS C_2, R_2, S_2.

II) NMIR TEST AS PER IS:4163-82.

Type → / Series ↓	Sulphide (A)	Alumina (B)	Silicate (C)	Globular Oxide (D)
THIN (MAX)	2.5	2.5	2.5	2.5
THICK (MAX)	0.5	0.5	0.5	0.5

SURFACE FINISH:-

AS PER IS: 3073-1967

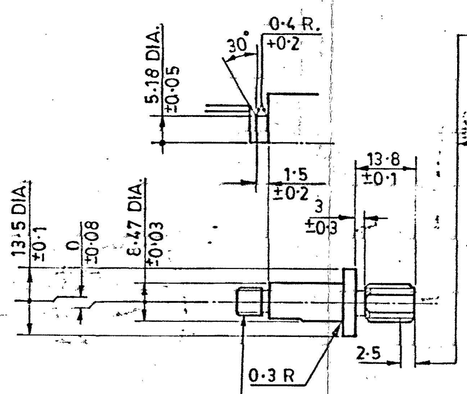

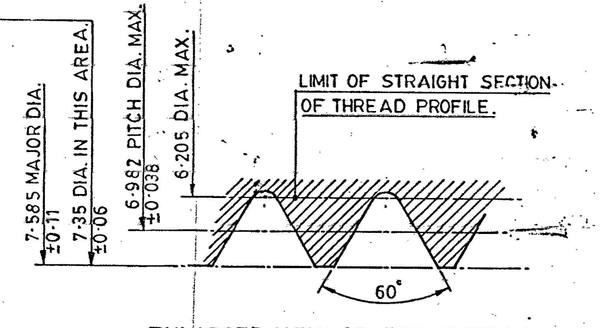

ENLARGED VIEW OF THE THREAD

SCALE:-20:1

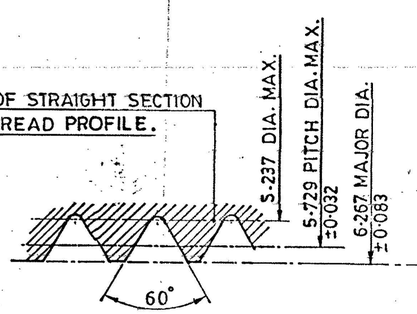

ENLARGED VIEW OF THE THREAD

SCALE:-20:1

CERTIFIED COPY OF THE STORE DRG/GAUGE DRG/Sch/SPECN/NOTE SHT.
DATE: 20.04.13 I/C DO

DATE	AUTHY.	BRIEF RECORD	ZONE	I/C; D.O.	G.O.
17-04-2013	26670-SA	NMIR DATA ADDED IN NOTE (ZONE A7) UNDER PARA (II)		I/C, D.O	AE(QA)
11-9-2002	25509-SA	PROFORMA CHANGED, PROTECTIVE FINISH & SURFACE FINISH AMENDED, NEG. RE-TRACED AND DRG. PROV. RE-SEALED. PREVIOUS D.C.NOS. 18368-SA, 18659-SA, 20804-SA, 21604-SA, 22279-SA & 22847-SA.		CD	DAC
				COPY	COPY
				SIGN.	

SEALED:- PROV. D.C.NO. 18368-SA, DT. 2.5.85

NOMENCLATURE:- SPINDLE REGULATOR.

DRN. | CHD. | TRD. Shansha | COMP.

SCALE:- 1:1, 2:1 & 20:1 | EST. MASS:-

APPROVED. DT. 4.3.85 NEG. RE-TRACED

DT. 11-9-2002. I/C; D.O

MATERIAL:- BS 970 Pt.1:1983 Gr. 080 M 40 NOrm.

H.T./HARDNESS:-

PROTECTIVE FINISH:- PHOSPHATE TO SPECN. JSS 0465:01-1994 CLASS II (ACCELERATED), OIL FINISH.

AHSP. CQA(SA), ICHAPUR

ASSY. 1005-006600 & 1005-006806

DGNR'S REF.:-

PART NO.

DRG. NO. A 2634

D.S.CAT. NO. 1005-007081