DS. CAT. NO. 1005-006815

DRAWING CONVENTIONS CONFORM TO JSG-0104
DIMNS. ARE IN mm. | GEN. TOL. MEDIUM IS:2102

●-SYMBOL REFERS TO AN INDICATION FOR SOME DIMENSIONS OR SOME PARTS OF THE COMPONENTS ELSEWHERE ON THE DRAWING.
P.V. = PLANE VERTICAL
P.H. = PLANE HORIZONTAL
P.T. = PLANE TRANSVERSE

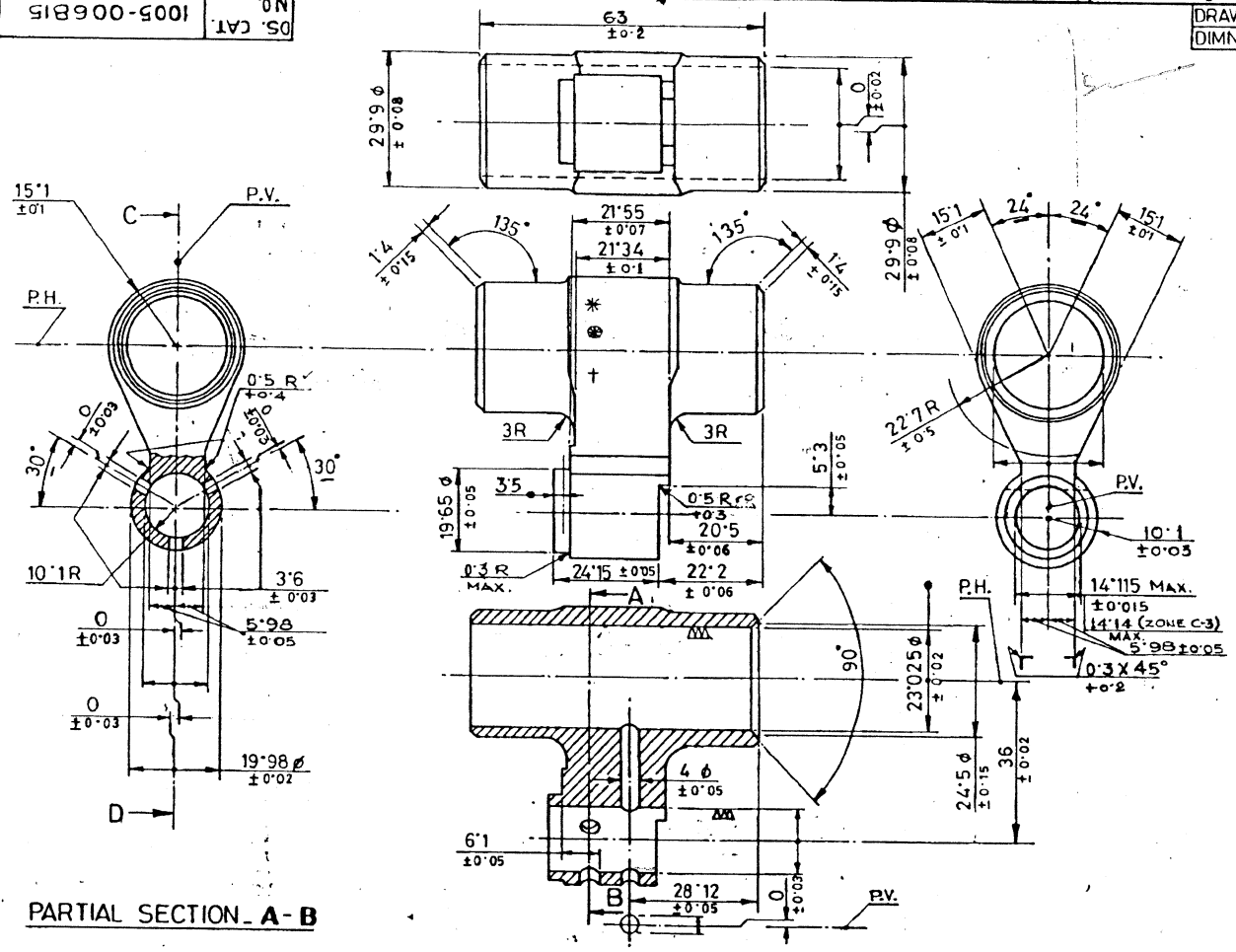

PARTIAL SECTION_ A-B

SECTION_ C-D

TABLE FOR MARKING			
No. TO MARK	MEASURED DIM. (ZONE C-5)		
1	23·037	TO	23·045
2	23·029	TO	23·037
3	23·021	TO	23·029
4	23·013	TO	23·021
5	23·005	TO	23·013

MARKING ON SAMPLE
✱ MANUFACTURER'S CODE
● DS CAT No
† Yr. of Mfg.

INVESTMENT CASTING MATERIAL: BS 3146 PT. 2:1975 & RADIO GRAPHIC ACCEPTANCE STANDARD AS PER ASTME-446-84 LEVEL-1

SURFACE FINISH:- AS PER IS: 3073, FOR HOLES SHOULD BE ▽, WHERE NOT SPECIFIED SHOULD BE ▽▽.

DATE	AUTHY.	BRIEF RECORD	ZONE	I/C, D.O.	G.O.
13.04.2002	25328-SA	RECORD OF RECEIPT CANCELLED AND DRG. SEALED AFRESH.		CD	DAC
16.5.96	23332-SA	PROFORMA CHANGED, MATL. & SURFACE FINISH AMENDED CONVENTION TOLERANCE & MARKING NOTE ADDED. DRG. REVISED RE-DRAWN COMPRISING THE EXISTING PART No. & RE-SEALED AS A RECORD OF RECEIPT. PREVIOUS D.C. Nos 15534-SA, 18067-SA, 20228 SA, 19826-SA, 21600-SA & 21710-SA			DAC
					COPY
SEALED :- D.C. NO. 25328-SA DT. 13-04-2002.				SIGN.	

NOMENCLATURE: **BLOCK GAS**

DRN	CHD	TRD	COMP	ASSY.	D.S. CAT. NO. 1005-006803 & 1005-006603
SCALE :- 1:1		EST MASS			
MFG/INSP. INSTRUCTIONS					
DT. 20-5-96 I/C, D.O.		APPROVED DT. 19.3.78 DRG. RE-DRAWN		AHSP	CQA(SA) ICHAPUR
MATERIAL	STEEL TO SPECN. BS. 970 PT 3:1991 GR. 410 S-21 OR 420 S 29.			DGNRS REF.	
HT/HARDNESS	265-300 BHN.			PART No.	16001 D & 14001 D
PROTECTIVE FINISH				DRG. No.	A 2233 & A 2201
				DS. CAT. No.	1005-006815