DRG CONVENTIONS CONFORM TO IS SPECIFICATION
DIMNS ARE IN mm

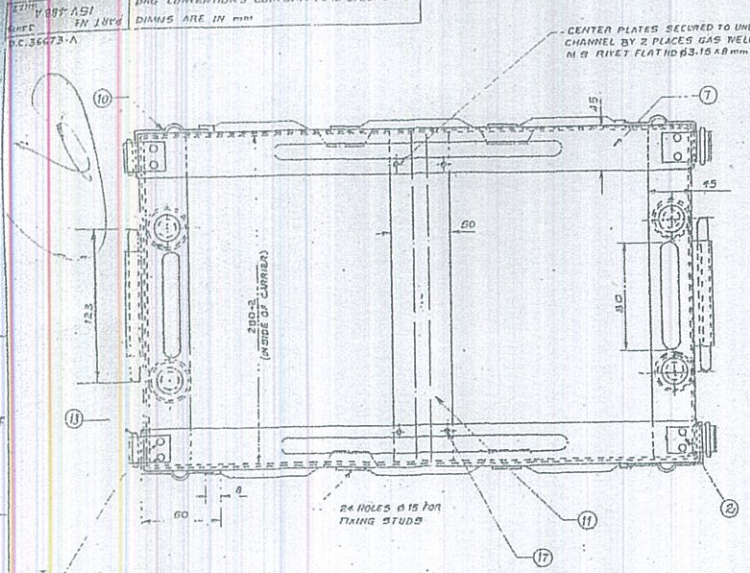

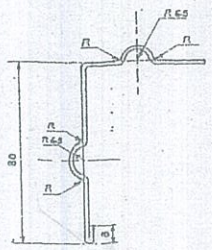

PART SECTION 'A-A'

MATERIAL :-

i) MILD STEEL 1.0 THICK SHEET TO IS 1079, 1988 REAFFIRMED IN 1992 GRADE Fe 330 HOT ROLLED ANNEALED OR

ii) MILD STEEL TO IS 513:1986 REAFFIRMED IN 1992 COLD ROLLED & ANNEALED TYPE O OR D BEST SURFACE

PAINTING :-

AFTER CLEANING & INSPECTION THE CARRIER INCLUDING ALL STEEL FITTINGS WILL BE PHOSPHATED OR GALVANIZED OR ALUMINIUM SPRAYED OR COATED WITH PAINT RED PRIMING RED OXIDE, ZINC CHROME (AMINOTON) AIR DRYING MATT FINISH BRUSHING/SPRAYING TO SPEC IS:51-63-05 (#) FOLLOWED BY A FINISHING COAT OF READYMIXED PAINT AIR DRYING BRUSHING/SPRAYING/DIPPING MATT FINISH TO SPEC IS:166:1973 REAFFIRMED IN 1988 (AS APPLICABLE FOR DEFENCE USE) SHADE OF PAINT WILL BE AS INDICATED IN THE SCHEDULE OF ORDER. THE PAINT MUST BE APPLIED EVENLY & EACH COAT MUST BE THOROUGHLY DRIED BEFORE THE APPLICATION OF THE NEXT COAT.

IMPORTANT

THE HANDLE WHEN LAID FLAT SHOULD NOT STAND PROUD

TOLERANCE ON UNTOLERANCED DIMENSIONS ± 0.5 mm.

RIVETS SHOULD BE MS FLATHEAD TO SPEC IS: 2998, 1982 REAFFIRMED IN 1987 TIN PLATED AS PER SPEC IS: 1363, 1977 REAFFIRMED IN 1987. Gr-2CG

LIST OF COMPONENTS

SL NO	DESCRIPTION	PART NO	DESIGNERS REF	SIZE	NO PER SET
1	CATCH LOCKING			Ø2 x 25 x 10	2
2	PLATE HOOK			AS SHOWN	2
3	HANDLE CLIP			AS SHOWN	2
4	HANDLE			AS SHOWN	2
5	HINGE			AS SHOWN	12
6	STUD			Ø 40 x 13.5	24
7	TOP & BOTTOM FRAME			1951 x 20 x 45	2
8	NAME PLATE			281 x 60 x 1 THICK	1
9	LINK FOR CATCH			AS SHOWN	2
10	VERTICAL CHANNEL			2414 x 60 x 45	4
11	RIBBED PLATE HORIZONTAL			AS SHOWN	2
12	RIVET			Ø 5 x 10 LONG	22
13	LINK FOR HINGE			AS SHOWN	6
14	CHANNEL FOR CATCH LOCKING			AS SHOWN	12
15	PIN HINGE (RIVET)			Ø3.15 x 28 LONG	2
16	RIVET			Ø5 28 mm LONG	16
17	RIVET			Ø3.15 x 8 mm LONG	10

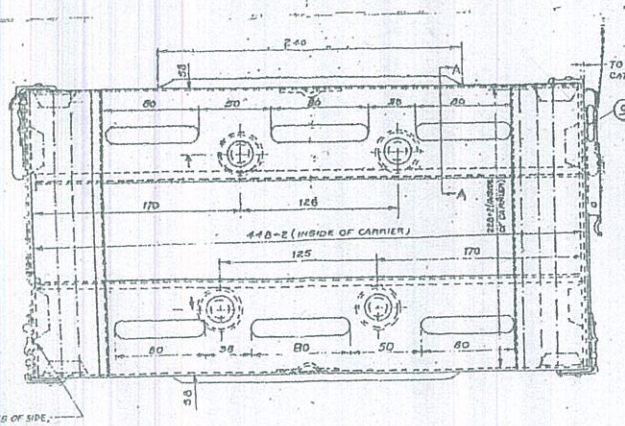

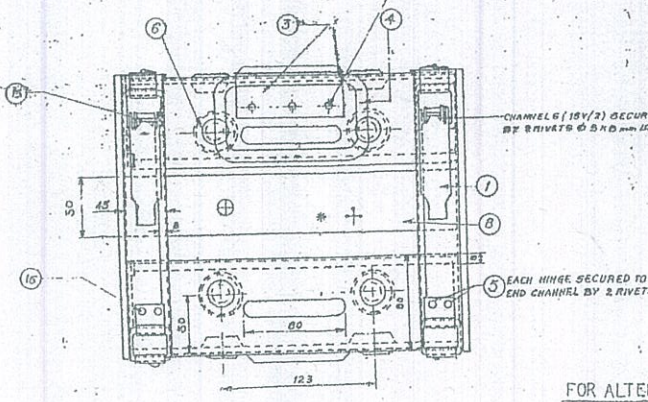

FOR DETAILS :- SEE ISV 488A SHT. 3

FOR ALTERNATIVE DESIGN SEE DRG No ISV 488A SHT 1.

⊕ SERIAL No OF THE CARRIER
✳ CONTRACTOR'S INITIALS OR RECOGNISED TRADE MARK
† YEAR OF MANUFACTURE

TO BE STAMPED OR EMBOSSED IN 10 mm LETTERING

R No	DATE	AUTHORITY	REVISION	ZONE	ARTT SIGN
	27/4/2000	D.C 36673-A	DRG. SEALED PROV.		

DRG. SEALED :- 27-4-2000 (PROV)

DRN SYG. J.L. Gowmark, CDA(A) | CHD A.G.K. | APPD | TPD | COMP. | SCALE: 1:1 & 1:2 | EST MASS | GAUGE SGND | DATE 2-2-2000

MATERIAL :
PROTECTIVE FINISH.

ASSY. DRG ISV 420 GA

DESIGNERS/REF CQA(A)/AMN/3143 | 2 SHEETS | SHEET 1

PART No ISV 488A | 36673 SHT 2

D S CAT No

MDP: CQA(A) KIRKEE.

CARRIER AMN. 13A STEEL FOR AMN. CONTAINER ASSY. 131