ZONE	ITEM NO	DRAWING NUMBER	D S CAT NUMBER	DESCRIPTION	QTY	REMARKS
	1	432.40.047-4		COLLAR	4	
	2	432.40.035-3		COLLAR	4	
	3	432.40.036-2		COLLAR	4	
	4	432.40.127-2		COLLAR	8	
	5	432.40.143-2		COLLAR	2	
	6	432.40.037-2		COLLAR	4	
	~~7~~	~~CQA(HV)5.43.004~~		~~Seal & Spring Set~~	~~2~~	①
	~~8~~	~~CQA(HV)5.43.001~~		~~Seal & Spring Set~~	~~2~~	①
	~~9~~	~~CQA(HV)5.43.002~~		~~Seal & Spring Set~~	~~2~~	①

ISSUE	DATE	AMENDMENTS	ISSUE	DATE
1	06.04.22	List AMENDED Ref No.07271/Trans/Mplg/GB/21-22		

DRN		HEAVY VECHICLE FACTORY		
APPD		TITLE: GEAR BOX SUB ASSY ITEMS CONSISTS OF ~~9~~ 6 ①		
DATE	19/04/2021	SHT.NO. 1 OF 1	D S CAT NUMBER	ITEM LIST FOR HVF/T-90/GB/ RUBBER/317

HVF_11-3-23

432.40.143-2

Инв.№ подл. | Подп. и дата | Взам.инв.№ | Инв.№ дубл. | Подп. и дата

KVD NO 72549 COMMON TO BLT

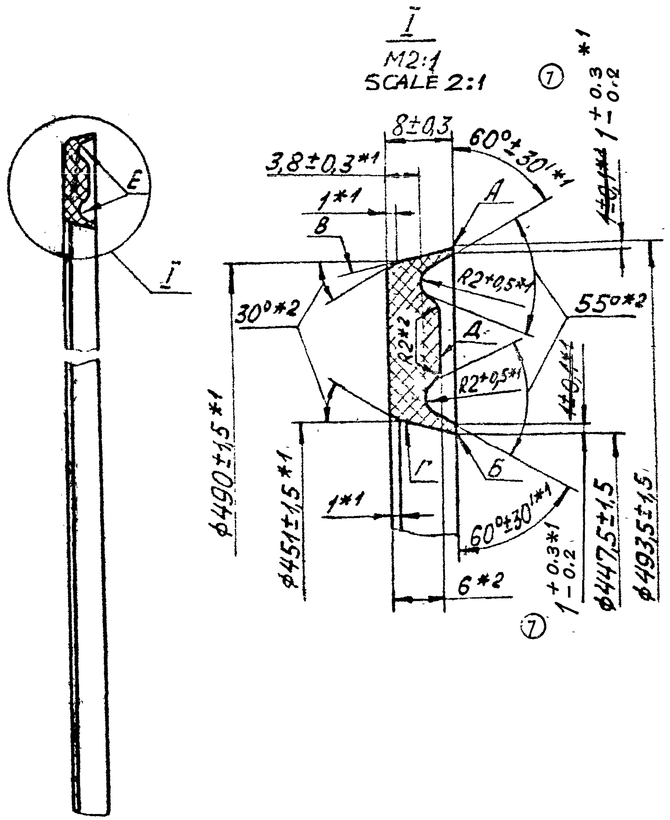

1. DIMENSIONS MARKED WITH *1 ARE TO BE ENSURED BY TOOL.
2. DIMENSIONS MARKED WITH *2 ARE GIVEN FOR REFERENCE.
3. 'Б' AND 'Г' ARE WORKING SURFACES.
4. ON WORKING EDGES 'A' AND 'Б' AND SURFACES 'B' AND 'Г', PERMISSIBLE ARE: MARKS, LEFT BY GRINDING OFF THE FLASH TO A DEPTH OF 0.2mm, MAXIMUM AND LOCAL INCONSIDERABLE BLUNTS OF R.0.1mm.
5. ON NON-WORKING SURFACES ALLOWED ARE PROJECTIONS, DEPRESSIONS UPTO 0.5mm, (THOSE ON SURFACES 'E', UPTO 0.2mm). BESIDES, PERMISSIBLE ARE HOLLOWS LEFT BY FALLEN - OUT INCLUSIONS UP TO 0.3mm DEEP AND HIGH (NOT MORE THAN THREE SUCH DEFECTS ON 100-mm ARE ALLOWED); IMPRINTS FROM MOULD OF NOT MORE THAN 0.5mm. ALL THESE DEFECTS SHOULD BE GROUND.
6. PERMISSIBLE ARE THE FOLLOWING DEFECTS:
   a) ON COMPONENT SURFACE - MOIRE PATTERN, DULL SPOTS, MINOR BURNINGS, EMBEDMENT OF FOREIGN MATTER, MARKS WITHOUT EXFOLIATION CAUSED BY SEPARATION OF BLANK FROM MOULD;
   b) ON NON-WORKING SURFACES - 0.3 mm, max. FROM MOULD ALONG ITS SPLIT SURFACES AND TRACES LEFT BY MACHINING OF FLASH OF NOT MORE THAN 0.3mm
   c) SPONTANEOUS DISTORTION OF COMPONENT FORM.
7. ON SURFACE, Д THE COMPONENT NUMBER SHOULD BE MARKED BY IMPRINTING THE ENGRAVING OF THE MOULD PRESS FORMING. FOR THE PURPOSE, USE TYPE ПО-3 GOST 2930-62.
8. SEALS SHOULD BE TRANSPORTED IN ACCURATE STACKS. AT THIS, IT IS IMPERMISSIBLE THAT COMPONENTS BE CONTAINER DAMAGED BY CONTAINERS.
4 5 6 9. DIAMETRICAL DIMENSIONS ARE TO BE CHECKED IN COMPLIANCE WITH INSTRUCTIONS UC-51-10-35-75.81
10. OTHER REQUIREMENTS FOR ARTICLES, CODE 253122, ARE AS PER TY 005216-75.

EXPLANATORY NOTE :

PHYSICAL PROPERTIES AND HARDNESS		
WORKING MEDIUM	:	OIL
OPERATING TEMPERATURE	:	- 20 TO + 200°C
RUPTURE STRENGTH	:	160 Kgf/cm^2(min)
ELONGATION AT RUPTURE	:	65 % (min)
HARDNESS (TM/P) DEVICE	:	76 - 88
DENSITY	:	1.95 ±0.05 g/cm^3
DURING USE IT SHOULD WITHSTAND A PRESSURE 50 Kgf/cm^2		

CHEMISTRY : NOT APPLICABLE.

FINISH : NOT APPLICABLE.

7C NOTE: Indigenous manufacturers should use only Indian equivalent rubber material/CQA(HV) rubber specification mentioned in the drawing.

7B ALT. MATL. RUBBER GRADE FKM TO SPECN. CQA(HV)/FKM F 7B

PILOT SAMPLE SHOULD BE APPROVED BY A H S P BEFORE BULK PRODUCTION.

EST. MASS 0.34 KG

TO BE STAMPED OR MARKED WHERE INDICATED THUS # (LETTERS)

ALL SHARP EDGES AND CORNERS TO BE REMOVED UNLESS OTHERWISE STATED MACHINED CORNERS TO HAVE R OUTSIDE R INSIDE EQUIVALENT CHAMFERS ARE PERMISSIBLE.

ISSUE	DATE	NATURE OF AMENDMENTS
7C	13.02.23	DC(I) No: CQA(HV)/T-72/C-0023/2023 dated 24.01.2023.
7B	13.01.07	Lt. No. 81312/CQA(HV)/DB-III/Alt. Matl. dt. 12.10.06.
7A	18.2.05	AS PER KIT LIST No. CQA(HV)/SET/0021
4,5,6,7	18.11.88	Amdt. List 6/ii, Book. 7.

DRN
CHD
TCD
APPD
DATE
SCALE - 1:1
DIMENSIONS IN mm
TOLERANCE ON DIMS UNLESS OTHERWISE STATED.

ALL THREADS CONFORM TO

MATERIAL :- RUBBER COMPOUND UPM-1316 TY 005216-75

USED ON :- 172.40.021 C6, 172.40.022 C6

CONTROLLERATE OF INSPECTION (HEAVY VEHICLES) AVADI

TITLE :- COLLAR 7A

D S CAT NUMBER

DRAWING NUMBER 432.40.143-2

HVF_11-3-23

DRAWING NUMBER
432.40.127-2

SHEET No. 1 OF 1

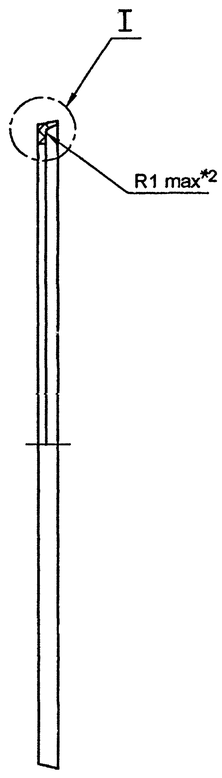

I
SCALE 2:1

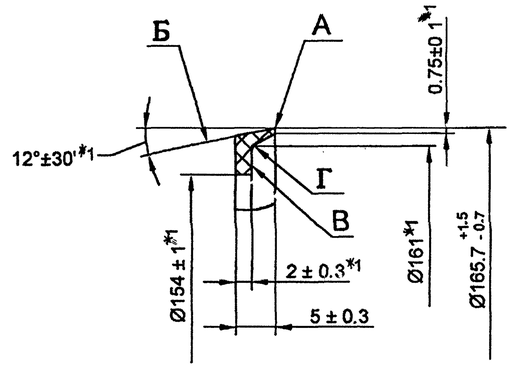

1 DIMENSIONS MARKED WITH *1 ARE TO BE ENSURED BY TOOL

2 DIMENSIONS MARKED WITH *2 ARE GIVEN FOR REFERENCE

3 Б IS WORKING SURFACE

4 ON WORKING EDGE 'A' AND SURFACE Б, PERMITTED ARE MARKS LEFT BY GRINDING OFF THE FLASH TO A DEPTH 0.2mm AND TO A HEIGHT OF 0.2mm AND LOCAL INCONSIDERABLE BLUNTS OF R0.1mm

5 ON NON-WORKING SURFACES, ALLOWED ARE PROJECTIONS, DEPRESSIONS UPTO 0.5mm (THOSE ON SURFACE 'Г' UPTO 0.2mm) BESIDES PERMISSIBLE ARE INCLUSIONS AND HOLLOWS LEFT BY FALLEN-OUT INCLUSIONS UPTO 0.3mm HIGH AND DEEP (NOT MORE THAN THREE SUCH DEFECTS ON 100mm ARC, ARE PERMISSIBLE) IMPRINTS FROM MOULD OF NOT MORE THAN 0.5mm ALL THESE DEFECTS SHOULD BE GROUND

6. PERMISSIBLE ARE THE FOLLOWING DEFECTS:

a) ON COMPONENT SURFACE – MOIRE PATTERN, DULL SPOTS, MINOR BURNINGS, EMBEDMENT OF FOREIGN, MATTER, MARKS WITHOUT EXPOLIATION CAUSED BY SEPARATION OF BLANK FROM MOULD,

b) ON NON-WORKING SURFACES - FLASH 0.3mm, MAX. FROM MOULD ALONG ITS SPLIT SURFACES AND TRACES LEFT BY MACHINING OF FLASH OF NOT MORE THAN 0.3mm,

c) SPONTANEOUS DISTORTION OF COMPONENT FORM

7. ON SURFACE 'B' THE COMPONENT NUMBER SHOULD BE MARKED BY IMPRINTING THE ENGRAVING OF THE MOULD. FOR THE PURPOSE, USE TYPE ПО-2 GOST 2930-62

8. SEALS SHOULD BE TRANSPORTED ON CARDBOARD OR PRESSBOARD MANDREL AT THIS, IT IS IMPERMISSIBLE THAT COMPONENTS BE DAMAGED BY CONTAINERS

④⑤ 9. DIAMETRICAL DIMENSIONS ARE TO BE CHECKED IN COMPLIANCE WITH INSTRUCTIONS Uc-51-10-35-~~76~~ 81

10. OTHER REQUIREMENTS FOR ARTICLES, CODE 253122, ARE AS PER TY 005216-75

EXPLANATORY NOTE

THE COMPONENT 'SEAL' SHOULD BE PRODUCED AS PER RUBBER CODE OF РТДИ CLASSIFICATION No 253122 AND GRADE UP П 1316 TO TY 005 216-75

THE TECHNICAL PARAMETERS OF THE SUBJECT ITEM SHOULD BE AS FOLLOWS:

1) WORKING MEDIA ———— LUBRICANT 'П'

2) OPERATING TEMPERATURE °C ———— FROM -20° TO +200°C

3) DESTINATION AND LIMIT PARAMETERS OF USE ———— RECIPROCATING MOTION SEAL

4) HARDNESS ———— 76 – 88

5) RUPTURE STRENGTH Kgf/cm^2 NOT LESS THAN ———— 160

6) ELONGATION AT RUPTURE % NOT LESS THAN ———— 65

7) RESIDUAL ELONGATION AFTER RUPTURE % NOT MORE THAN ———— 5

8) DENSITY g/cm^3 ———— 1,95 ± 0,05

5D NOTE: Indigenous manufacturers should use only Indian equivalent rubber material/CQA(HV) rubber specification mentioned in the drawing.

5A 172.40.052cbCb
172.40.053cbCb
172.40.054cbCb

RUBBER COMPOUND UPII -1316
TY 005 216-75

5C ALT. MATL: RUBBER GRADE FKM TO SPECN. CQA(HV)/FKM

PILOT SAMPLE SHOULD BE APPROVED BY A H S P BEFORE BULK PRODUCTION.

EST. WT. (Kg)	TO BE STAMPED OR MARKED WHERE INDICATED THUS # (LETTERS)
0.015	

ALL SHARP EDGES AND CORNERS TO BE REMOVED UNLESS OTHERWISE STATED MACHINED CORNERS TO HAVE R OUT-SIDE R INSIDE EQUIVALENT CHAMFERS ARE PERMISSIBLE.

ISSUE	DATE	NATURE OF AMENDMENTS
5D	13.02.23	DC(II) No: CQA(HV)/T-72/C-0023/2023 dated 24.01.2023.
5C	13.01.07	L.t. No. 81312/CQA(HV)/DB-III/Alt. Matl. dt. 12.10.06.
5B	18.2.05	AS PER KIT LIST No.CQA(HV)/SET/0021
5A	17.9.04	N OF A. No. CQA(HV)/T90/40/001
4,5	18.11.88	AMDT. LIST. 6/II, BOOK-7

DRN	Sd/=
CHD	Sd/=
APPD	Sd/=
DATE	18-09-82
SCALE:-	1:1
DIMENSIONS IN mm	
TOLERANCE ON DIMNS UNLESS OTHERWISE STATED IS: 2102-69	
ALL THREADS TO CONFORM TO	

MATERIAL:- SEE ABOVE

USED ON:- 172.40.018cb
172.40.019cb
172.40.020cb

CONTROLLERATE OF QUALITY ASSURANCE (HEAVY VEHICLES) AVADI

TITLE:- COLLAR 5B

D S CAT NUMBER

DRAWING NUMBER 432.40.127-2

COMMON TO T-90 & BLT
DRG. RE INDIANISED BASED ON RUSSIAN ORIGINAL ISSUE - 3

(R.RAMANI), JTO 10-03-06

T-78

SIZE A2

HVF_11-3-23

DRAWING NUMBER 432.40.047-4

SHEET No. 1 OF 1

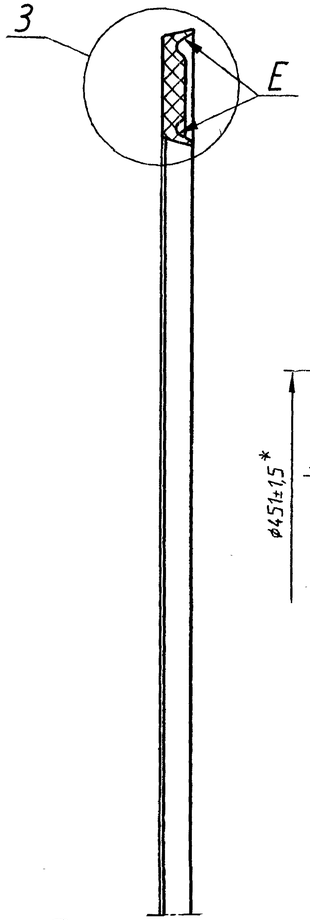

3 (2:1)

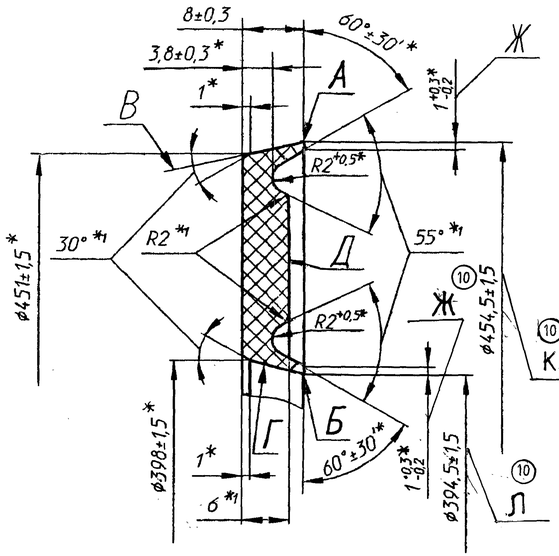

1. *Размеры обеспечить инструментом.
2. *1 Размеры для справок.
3. Поверхности В и Г - рабочие.
4. Допускаются на рабочих кромках А и Б и поверхностях В и Г следы от зашлифовки облоя глубиной не более 0,2 мм и облой высотой не более 0,2 мм и местные незначительные притупления не более радиуса 0,1 мм.
5. Допускаются на нерабочих поверхностях выступы, углубления не более 0,5 мм, а на поверхностях Е не более 0,2 мм, включения и следы от их выпадания высотой и глубиной не более 0,3 мм и не более трех на длине дуги 100 мм, отпечатки от пресс-формы не более 0,5 мм, зашлифовки.
6. Допускается:
- на поверхностях детали муаровый рисунок, следы потертости глянца, точечные пригары и вкрапления следы стыковки заготовки без расслоений;
- наличие облоя не более 0,3 мм на нерабочих поверхностях от пресс-формы по поверхности ее разъема, следы от обработки облоя не более 0,3 мм;
- самопроизвольное искажение формы детали.
7. На поверхности Д маркировать номер детали оттиском гравировки пресс-формы. Шрифт ПС-3 ГОСТ 2930-62.
8. Транспортировку производить аккуратно сложенными стопками, при этом деформация деталей тарой не допускается.
9. Допускается местное изменение размера Ж на размер $1^{+0,3*}_{-0,5}$ мм.
10. Контроль диаметральных размеров производить по инструкции № ИС-51-10-35-81.
11. Остальные требования по ТУ 005216-99, код 253120 и по 520.ТУ1.

1. *Dimensions to be ensured by tool.
2. *1 Dimensions for reference.
3. Surfaces B and Г - operating surfaces.
4. On working edges A and Б and surfaces B and Г marks due to grinding of fins with depth not more than 0.2 mm and fin with height not more than 0.2 mm and local minor blunting with radius not more than 0.1 mm are allowed.
5. On non-working surfaces: projection not more than 0.5 mm, and on surfaces E not more than 0.2 mm, inclusion and marks due to their falling out with height and depth not more than 0.3 mm and more than three on length of are 100 mm, impression due to mold by not more than 0.5 mm, grinding are allowed.
6. The following are allowed:
   - on surface of parts moire marking traces due to loss of polish, burned spots and accumulation of foreign particles, traces of joints of blank without scaling.
   - presence of fins not more than 0.3 mm on non-working surfaces due to mold along the surface of its joint, marks due to machining of fins not more than 0.3 mm;
   - spontaneous dissortion of molding of component, in free state.
7. On surface Д mark the part No by engraving the mold with impression. Letter type ПО-3 GOST 2930-62.
8. Transportation should be carried out accurately by laying in piles. During this deformation of parts in container is not permitted.
9. Local variation of dimension Ж with dimension $1^{+0,3*}_{-0,5}$ mm is permitted.
10. Checking of ~~diametrical~~ dimensions/K & Л should be carried out as per instructions No. ИС-51-10-35-~~81~~.85
11. Other requirements as per TY 005216-99, Code 253120 and as per 520.TY1.

10A EQ.LT.MATL: Rubber Grade FKM to CQA(HV)/FKM.

PILOT SAMPLE SHOULD BE APPROVED BY A H S P BEFORE BULK PRODUCTION.

10B NOTE: Indigenous manufacturers should use only Indian equivalent rubber material/CQA(HV) rubber specification mentioned in the drawing.

EST. WT. (Kg)	TO BE STAMPED OR MARKED WHERE INDICATED THUS # (LETTERS)
0.43	

ALL SHARP EDGES AND CORNERS TO BE REMOVED UNLESS OTHERWISE STATED MACHINED CORNERS TO HAVE R OUTSIDE R INSIDE EQUIVALENT CHAMFERS ARE PERMISSIBLE.

ISSUE	DATE	NATURE OF AMENDMENTS
10B	13.02.23	DC(II) No: CQA(HV)/T-72/C-0023/2023 dated 24.01.2023.
10A	03.04.17.	B1312/CQA(HV)/DB-III/RUB/ALT.MATL, Dt:12.10.06.
10	28.5.12	AUTHY VIDE NOTN.No. 188A.69-08

DRN	Cpustyorazy
CHD	Cpustyorazy
APPD	
DATE	30-10-04
SCALE:-	1 : 1
DIMENSIONS IN mm	
TOLERANCE ON DIMNS UNLESS OTHERWISE STATED IS: 2102 - 69	
ALL THREADS TO CONFORM TO	

MATERIAL :- Rubber ИРП -1316 TY 005216-99

USED ON :- 172.40.052cbCb 172.40.053cbCb 172.40.019Cb, 172.40.020Cb

CONTROLLERATE OF QUALITY ASSURANCE (HEAVY VEHICLES) AVADI

TITLE :- COLLAR

D S CAT NUMBER

DRAWING NUMBER 432.40.047-4

DRG. INDIANISED BASED ON RUSSIAN ORIGINAL ISSUE - 8

COMMON TO T-72 & BLT

356

SUPPLY CODE U-01-1-2 D90057

F - 78 / 55

SIZE A4 x 3

HVF_11-3-23

DRAWING NUMBER
432.40.037-2

SHEET No. 1 OF 1

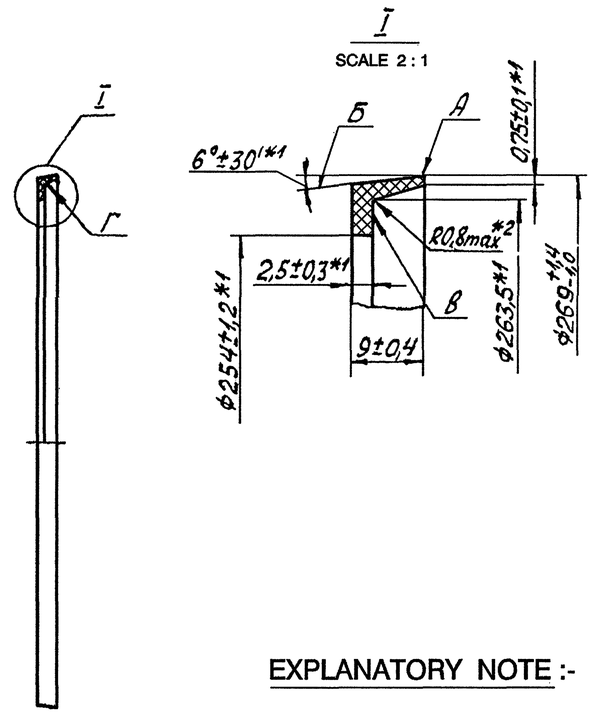

1. DIMENSION MARKED WITH *1 ARE TO BE ENSURED BY TOOL.
2. DIMENSIONS MARKED WITH *2 ARE GIVEN FOR REFERENCE.
3. "Г" IS WORKING SURFACE.
4. WORKING EDGE "A" AND SURFACE "Б" MAY HAVE MARKS CAUSED BY GRINDING OFF THE FLASH UPTO 0.2 MM IN DEPTH AND 0.2 MM IN HEIGHT AND LOCAL INCONSIDERABLE BLUNTS OF R 0.1 MM.
5. NON-WORKING SURFACES MAY HAVE PROJECTIONS, DEPRESSIONS UPTO 0.5 MM (THOSE ON SURFACE "Г" UPTO 0.2 MM), BESIDES, THEY MAY HAVE INCLUSIONS AND HOLLOWS LEFT BY FALLEN-OUT INCLUSIONS UPTO 0.3 MM HIGH AND DEEP (NOT MORE THAN THREE SUCH DEFECTS ON 100 MM ARC ARE PERMISSIBLE), IMPRINTS FROM MOULDS OF NOT MORE THAN 0.5 MM. ALL THESE DEFECTS SHOULD BE GROUND.
6. PERMISSIBLE ARE THE FOLLOWING DEFECTS.
   a) ON COMPONENT SURFACE - MOIRE PATTERN, DULL SPOTS, MINOR BURNINGS, EMBEDMENT OF FOREIGN MATTER, MARKS WITHOUT EXFOLIATION CAUSED BY SEPERATION OF BLANK FROM MOULD.
   b) ON NON-WORKING SURFACES - 0.3 MM MAX. FROM MOULD FLASH, ALONG ITS SPLIT SURFACES AND TRACES LEFT BY MACHINING OF FLASH OF NOT MORE THAN 0.3 MM, FLASH MAXIMUM 0.3 MM
   c) SPONTANEOUS DISTORTION OF COMPONENT FORM.
7. ON SURFACE "B" THE COMPONENT NUMBER SHOULD BE MARKED BY IMPRINTING THE ENGRAVING OF THE MOULD. FOR THE PURPOSE, USE TYPE ПО-2 OF GOST 2930-62.
8. SEALS SHOULD BE TRANSPORTED ON CARDBOARD OR PRESS BOARD MANDREL. AT THIS IT IS IMPERMISSIBLE THAT ON COMPONENTS BE DAMAGED BY CONTAINERS.

④ ⑤ 9. DIAMETRICAL DIMENSIONS ARE TO BE CHECKED IN COMPLIANCE WITH INSTRUCTIONS ЦС-51-10-35-75. 81.

10. OTHER REQUIREMENTS FOR ARTICLES, CODE 253122, AS PER TY 005 216-75.

(5D) NOTE: Indigenous manufacturers should use only Indian equivalent rubber material/CQA(HV) rubber specification mentioned in the drawing.

EXPLANATORY NOTE :-

CHEMISTRY : NOT APPLICABLE. FINISH : NOT APPLICABLE.

PHYSICAL PROPERTIES :

WORKING MEDIUM	: OIL
WORKING TEMPERATURE	: -20°C TO +200°C
RUPTURE STRENGTH	: 160 Kgf / cm² (MIN)
ELONGATION OF RUPTURE	: 65 % (MIN)
HARDNESS (TNP) DEVICE	: 76-88
DENSITY	: 1.95 g / cm³ ± 0.05

DURING USE IT SHOULD WITHSTAND A PRESSURE 50 Kgf / cm² (MIN).

(5A) 172.40.052cbCb
172.40.053cbCb
172.40.054cbCb

RUBBER COMPOUND ЦРЛ-1316
TY 005 216-75

(5C) ALT. MATL: RUBBER GRADE FKM TO SPECN. CQA(HV)/FKM

PILOT SAMPLE SHOULD BE APPROVED BY A H S P BEFORE BULK PRODUCTION.

EST. WT. (Kg)	TO BE STAMPED OR MARKED WHERE INDICATED THUS # (LETTERS)
0.043	

ALL SHARP EDGES AND CORNERS TO BE REMOVED UNLESS OTHERWISE STATED MACHINED CORNERS TO HAVE R OUTSIDE R INSIDE EQUIVALENT CHAMFERS ARE PERMISSIBLE.

ISSUE	DATE	NATURE OF AMENDMENTS
5D	13.02.23	DC(II) No: CQA(HV)/T-72/C-0023/2023 dated 24.01.2023.
5C	13.01.07	Lt. No. 81312/CQA(HV)/DB-III/Alt. Matl. dt. 12.10.06.
5B	18.2.05	AS PER KIT LIST No.CQA(HV)/SET/0021
5A	17.9.04	N OF A. No. CQA(HV)/T90/40/001
4,5	18.11.88	AMDT. LIST. 6 / II, BOOK - 7

DRN	Sd / =
CHD	Sd / =
APPD	Sd / =
DATE	18-09-86
SCALE:-	1 : 2
DIMENSIONS IN mm	
TOLERANCE ON DIMNS UNLESS OTHERWISE STATED IS : 2102-69	
ALL THREADS TO CONFORM TO	

MATERIAL :- SEE ABOVE

USED ON :- 172.40.018cb
172.40.019cb
172.40.020cb

CONTROLLERATE OF QUALITY ASSURANCE (HEAVY VEHICLES) AVADI

TITLE :- COLLAR (5B)

D S CAT NUMBER

DRAWING NUMBER 432.40.037-2

COMMON TO T-90 & BLT
DRG. RE INDIANISED BASED ON RUSSIAN ORIGINAL ISSUE - NIL

(R.RAMANI) JTO 10-03-06

F-78

SIZE A2

HVF_11-3-23

DRAWING NUMBER
432.40.036-2

SHEET No. 1 OF 1

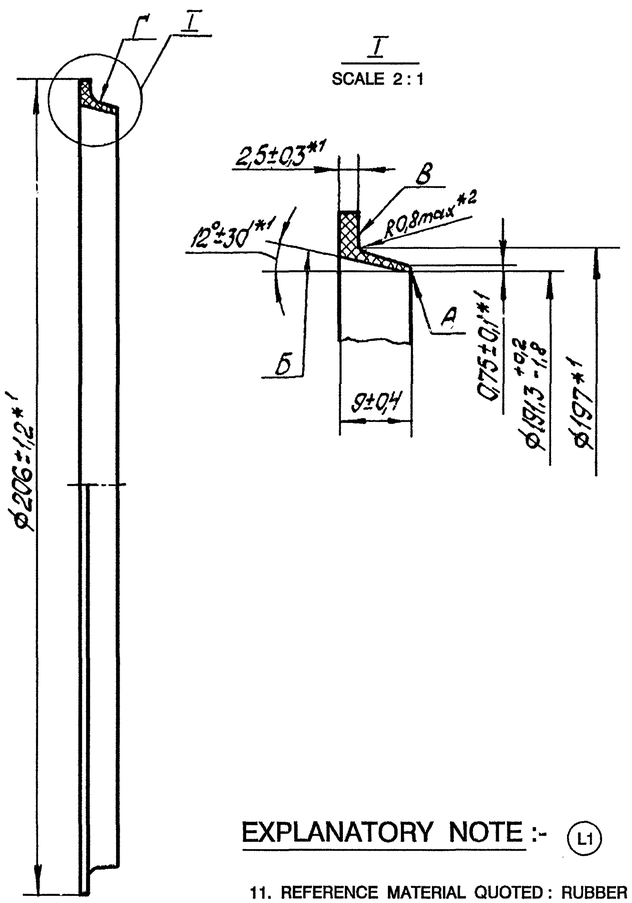

1. DIMENSIONS MARKED WITH *1 ARE TO BE ENSURED BY TOOL.
2. DIMENSIONS MARKED WITH *2 ARE GIVEN FOR REFERENCE.
3. "Б" IS MARKING SURFACE.
4. WORKING EDGE "A" AND SURFACE "Б" MAY HAVE MARKS CAUSED BY GRINDING OFF THE FLASH UPTO 0.2 MM IN DEPTH AND 0.2 MM IN HEIGHT AND LOCAL INCONSIDERABLE BLUNTS OF UPTO R 0.1 MM.
5. NON-WORKING SURFACES MAY HAVE PROJECTIONS, DEPRESSIONS UPTO 0.5 MM (THOSE ON SURFACE "Г" UPTO 0.2 MM), BESIDES, THEY MAY HAVE INCLUSIONS AND HOLLOWS LEFT BY FALLEN-OUT INCLUSIONS 0.3 MM HIGH AND DEEP (NOT MORE THAN THREE SUCH DEFECTS ON 100 MM ARC ARE PERMISSIBLE), IMPRINTS FROM MOULD OF NOT MORE THAN 0.5 MM. ALL THESE DEFECTS SHOULD BE GROUND.
6. PERMISSIBLE ARE THE FOLLOWING DEFECTS.
   a) ON COMPONENT SURFACE - MOIRE PATTERN, DULL SPOTS, MINOR BURNINGS, EMBEDMENT OF FOREIGN MATTER, MARKS WITHOUT EXFOLIATION CAUSED BY SEPERATION OF BLANK FROM MOULD.
   b) ON NON-WORKING SURFACES - FLASH 0.3 MM MAX. FROM MOULD ALONG ITS SPLIT SURFACES AND TRACES LEFT BY MACHINING OF FLASH OF NOT MORE THAN 0.3 MM.
   c) SPONTANEOUS DISTORTION OF COMPONENT FORM.
7. ON SURFACE "B" THE COMPONENT NUMBER SHOULD BE MARKED BY IMPRINTING THE ENGRAVING OF THE MOULD. FOR THE PURPOSE, USE TYPE ПО-2 OF GOST 2930-62.
8. SEALS SHOULD BE TRANSPORTED ON CARDBOARD CARTON OR PRESS BOARD MANDREL. AT THIS, IT IS IMPERMISSIBLE THAT COMPONENTS BE DAMAGED BY CONTAINERS.
5 6 9. DIAMETRICAL DIMENSIONS ARE TO BE CHECKED IN COMPLIANCE WITH INSTRUCTIONS ЦС-51-10-35-75. 81.
10. OTHER REQUIREMENTS FOR ARTICLES, CODE 253122, AS PER TY 005 216-75.

6D NOTE: Indigenous manufacturers should use only Indian equivalent rubber material/CQA(HV) rubber specification mentioned in the drawing.

EXPLANATORY NOTE :- L1

11. REFERENCE MATERIAL QUOTED: RUBBER STOCK ЦРП-1316 TY 005 216-75

PHYSICAL AND MECHANICAL PARAMETERS	
TYPE OF RAW RUBBER	CK Ø 26
RUPTURE STRENGTH	160 Kgf/cm² MIN.
ELONGATION OF RUPTURE	65 % MIN
RESIDUAL ELONGATION AFTER RUPTURE	5 % MAX.
HARDNESS IN CONVENTIONAL UNITS (TNP)	76 TO 88
DENSITY	1.95±0.05 g/cm³
WORKING TEMPERATURE	−20°C TO +200°C
WORKING MEDIUM	OILS

6A 172.40.052cbCb
172.40.053cbCb
172.40.054cbCb

RUBBER STOCK ЦРП-1316
TY 005 216-75

6C ALT. MATL: RUBBER GRADE FKM TO SPECN. CQA(HV)/FKM

COMMON TO T-90 & BLT
DRG. RE INDIANISED BASED ON RUSSIAN ORIGINAL ISSUE - NIL
IR.RAMANI, JTO 10-05-06

PILOT SAMPLE SHOULD BE APPROVED BY A H S P BEFORE BULK PRODUCTION.

EST. WT. (Kg) 0.03 — TO BE STAMPED OR MARKED WHERE INDICATED THUS # (LETTERS)

ALL SHARP EDGES AND CORNERS TO BE REMOVED UNLESS OTHERWISE STATED MACHINED CORNERS TO HAVE R OUTSIDE R INSIDE EQUIVALENT CHAMFERS ARE PERMISSIBLE.

ISSUE	DATE	NATURE OF AMENDMENTS
6D	13.02.23	DC(I) No: CQA(HV)/T-72/C-0023/2023 dated 24.01.2023.
6C	13.01.07	Lt. No. 81312/CQA(HV)/DB-III/Alt. Matl. dt. 12.10.06.
6B	18.2.05	AS PER KIT LIST No. CQA(HV)/SET/0021
6A	17.9.04	N OF A. No. CQA(HV)/T90/40/001
5,6	18.11.88	AMDT. LIST. 6/II, BOOK-7

DRN	Sd/=
CHD	Sd/=
APPD	Sd/=
DATE	18-09-86
SCALE:-	1:1
DIMENSIONS IN mm	
TOLERANCE ON DIMNS UNLESS OTHERWISE STATED IS: 2102-69	
ALL THREADS TO CONFORM TO IS: 4218 Pt. IV	

MATERIAL:- SEE ABOVE

USED ON:- 172.40.018cb
172.40.019cb
172.40.020cb

CONTROLLERATE OF QUALITY ASSURANCE (HEAVY VEHICLES) AVADI

TITLE:- COLLAR 6B

D S CAT NUMBER

DRAWING NUMBER 432.40.036-2

F-78

SIZE A2

DRAWING NUMBER
432.40.035-3

SHEET No. 1 OF 1

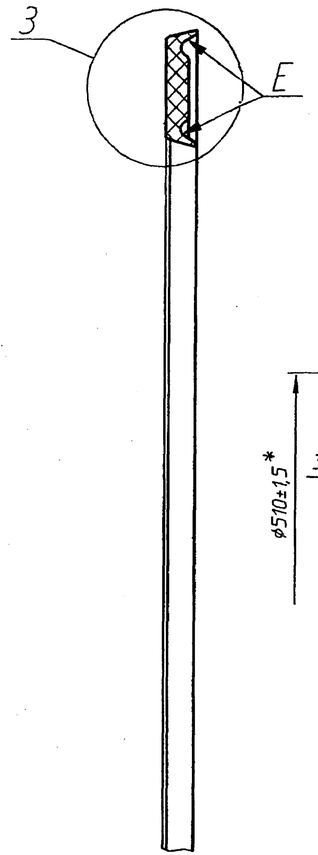

3 (2:1)

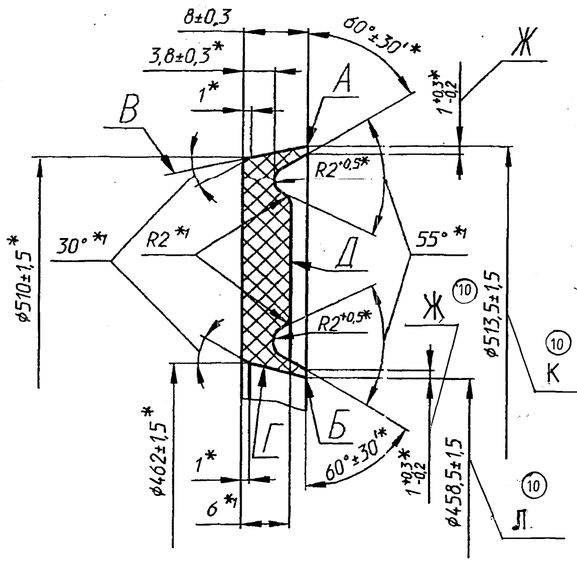

1. *Размеры обеспечить инструментом.
2. *1 Размеры для справок.
3. Поверхности В и Г - рабочие.
4. Допускаются на рабочих кромках А и Б и поверхностях В и Г следы от зашлифовки облоя глубиной не более 0,2 мм и облой высотой не более 0,2 мм и местные незначительные притупления не более радиуса 0,1 мм.
5. Допускаются на нерабочих поверхностях: выступы, углубления не более 0,5 мм, а на поверхностях Е не более 0,2 мм, включения и следы от их выпадания высотой и глубиной не более 0,3 мм и не более трех на длине дуги 100 мм, отпечатки от пресс-формы не более 0,5 мм, зашлифовка.
6. Допускается:
- на поверхностях детали муаровый рисунок, следы потертости глянца, точечные пригары и вкрапления, следы стыковки заготовки без расслоений;
- наличие облоя не более 0,3 мм на нерабочих поверхностях от пресс-формы по поверхности ее разъема, следы от обработки облоя не более 0,3 мм;
- самопроизвольное искажение формы детали.
7. На поверхности Д маркировать номер детали оттиском гравировки пресс-формы. Шрифт ПО-3 ГОСТ 2930-62.
8. Транспортировку производить аккуратно сложенными стопками, при этом деформация деталей тарой не допускается.
9. Допускается местное изменение размера Ж на размер $1^{+0,3*}_{-0,5}$ мм.
10. Контроль диаметральных размеров производить по инструкции № ИС-51-10-35-81.
11. Остальные требования по ТУ 005216-99, код 253120 и по 520.ТУ1.

1. *Dimensions to be ensured by tool.
2. *1 Dimensions for reference.
3. Surfaces B and Г - operating surfaces.
4. On working edges A and Б and surfaces B and Г marks due to grinding of fins with depth not more than 0.2 mm and fin with height not more than 0.2 mm and local minor blunting with radius not more than 0.1 mm are allowed.
5. On non-working surfaces:
projection not more than 0.5 mm, and on surfaces E not more than 0.2 mm, inclusion and marks due to their falling out with height and depth not more than 0.3 mm and more than three on length of are 100 mm, impression due to mold by not more than 0.5 mm, grinding are allowed.
6. The following are allowed:
- on surface of parts moire marking traces due to loss of polish, burned spots and accumulation of foreign particles, traces of joints of blank without scaling.
- presence of fins not more than 0.3 mm on non-working surfaces due to mold along the surface of its joint, marks due to machining of fins not more than 0.3 mm;
(10) - spontaneous dissortion of molding of component, in free state.
7. On surface Д mark the part No by engraving the mold with impression. Letter type ПО-3 GOST 2930-62.
8. Transportation should be carried out accurately by laying in piles. During this deformation of parts in container is not permitted.
9. Local variation of dimension Ж with dimension $1^{+0.3*}_{-0.5}$ mm is permitted.
(10) 10. Checking of ~~diametrical~~ dimensions К & Л should be carried out as per instructions No. ИС-51-10-35-81.85
11. Other requirements as per TY 005216-99, Code 253120 and as per 520.TY1.

DRG. INDIANISED BASED ON RUSSIAN ORIGINAL ISSUE - 8

COMMON TO T-72 & BLT

356

SUPPLY CODE
U-01-1-2
D90057

F - 78
54

SIZE A4 x 3

PILOT SAMPLE SHOULD BE APPROVED BY A H S P BEFORE BULK PRODUCTION.

EST. WT. (Kg)	TO BE STAMPED OR MARKED WHERE INDICATED THUS # (LETTERS)
0.465	

ALL SHARP EDGES AND CORNERS TO BE REMOVED UNLESS OTHERWISE STATED MACHINED CORNERS TO HAVE R OUTSIDE R INSIDE EQUIVALENT CHAMFERS ARE PERMISSIBLE.

ISSUE	DATE	NATURE OF AMENDMENTS
10	28.5.12	AUTHY. VIDE NOTN.No. 188A.69-08

DRN	Gurusharan Singh
CHD	Gurusharan Singh
APPD	
DATE	30-10-04
SCALE:-	1 : 1
DIMENSIONS IN mm	
TOLERANCE ON DIMNS UNLESS OTHERWISE STATED IS : 2102 - 69	
ALL THREADS TO CONFORM TO	

MATERIAL :- Rubber ИРП -1316 TY 005216-99

USED ON :- 172.40.cb-2Cb, 172.40.050cbCb, 175.40Cb-5Cb, 172.40.051cbCb, 175.40Cb-6Cb, 172.40.cb-1Cb

CONTROLLERATE OF QUALITY ASSURANCE (HEAVY VEHICLES) AVADI

TITLE :- COLLAR

D S CAT NUMBER

DRAWING NUMBER 432.40.035-3