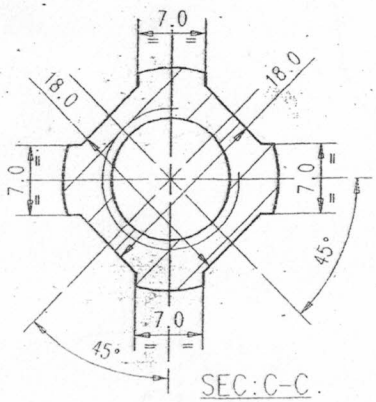

SEC:C-C

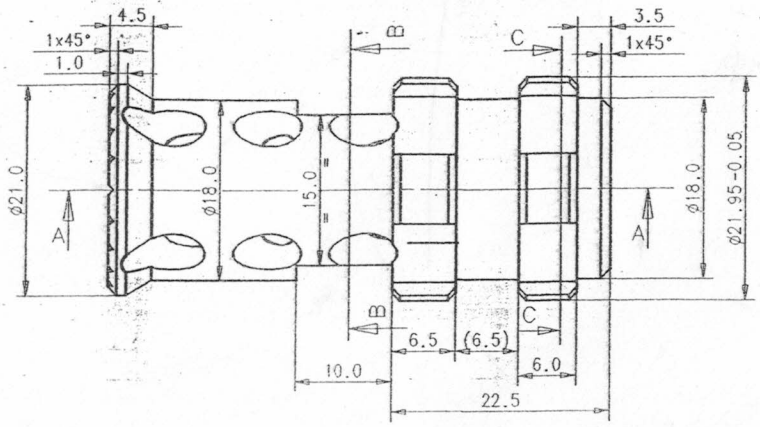

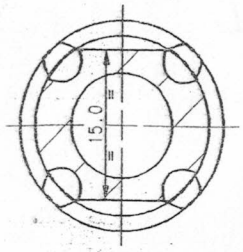

SEC:B-B

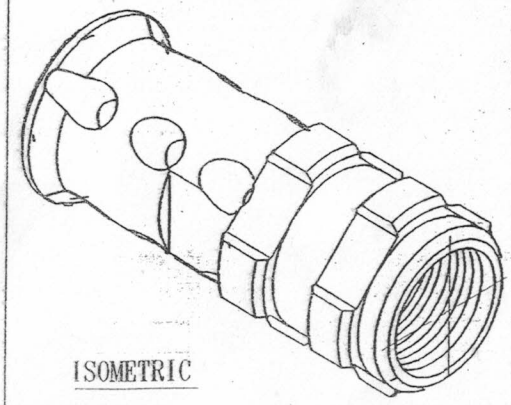

ISOMETRIC

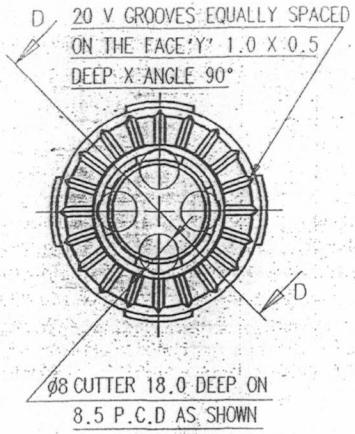

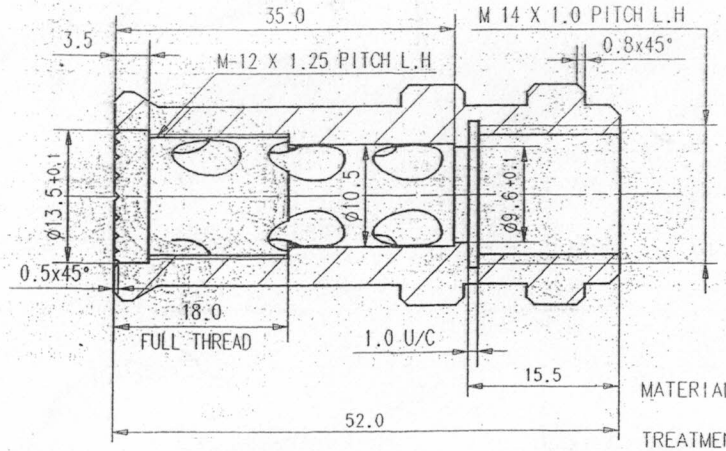

SEC:A-A

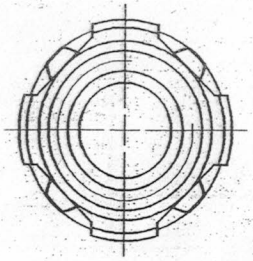

प्रमाणित प्रति / CERTIFIED COPY OF
ड्राइंग / लेआउट / गेज शिडयूल
DRG/LAYOUT/GAUGE SCHEDULE
दिनांक / AT THIS DATE 13.11.17
सी डी डी / CDD
राइफल फैक्टरी, ईशापुर
RIFLE FACTORY, ISHAPORE

MATERIAL - STEEL BS Pt.1:1983-708 M40'T' (En 19 A'T')

TREATMENT - HARDENED & TEMPERED TO 250-300 H.V

FINISH - PHOSPHATED TO SPECN. JSS-0465-01-1988
CLASS II (ACCELERATED) OIL FINISH

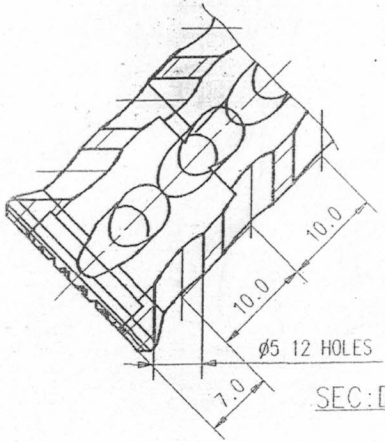

SEC:D-D

ASSY.DRAWING NO.

INDIAN ORDNANCE FACTORIES
RIFLE FACTORY
ISHAPORE

2017	NAME	DATE
DESIGNED	J.CHAK.	07-11
DRAWN		11/11
CHECKED		11/11/17
APPROVED		

ASSAULT RIFLE 5.56 mm., EXCALIBUR MK-1
7.63x39 ASSAULT RIFLE (GHAATAK)
FLASH ELIMINATOR LIGHTER

SCALE 2:1

DRAWING NUMBER RFI/SK.9778

SHEET- OF-