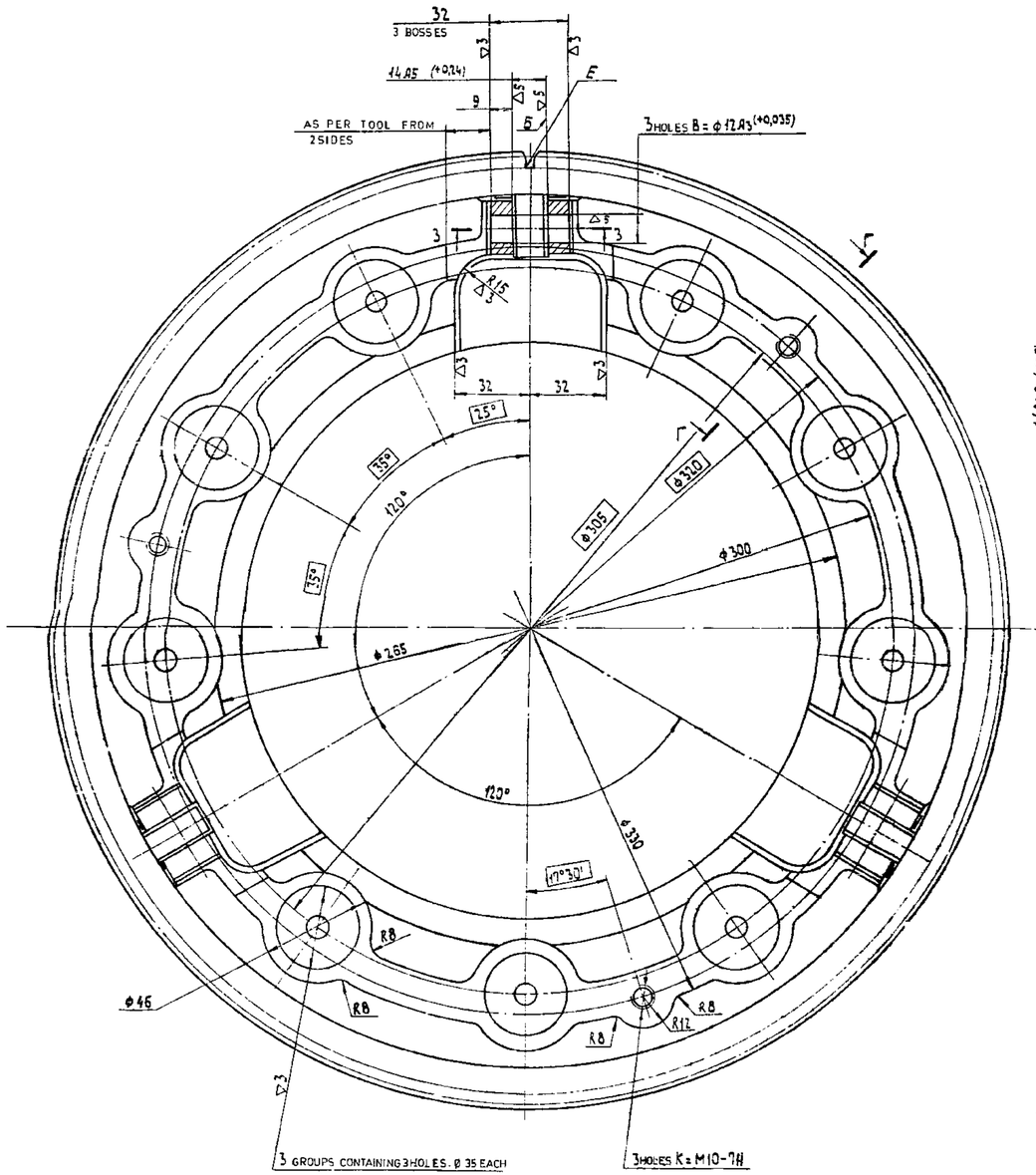

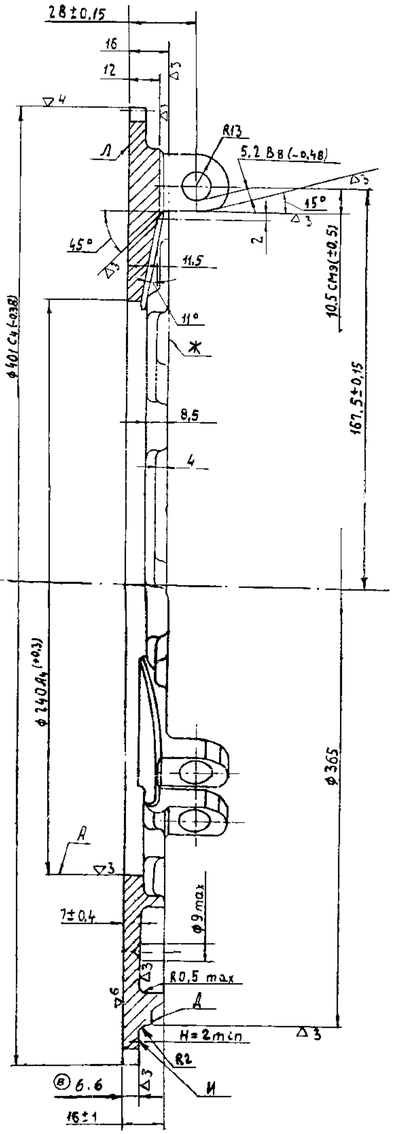

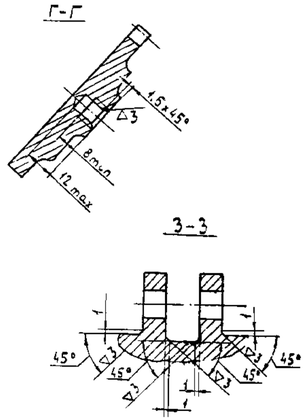

DATE OF BASIC RACK	MODULE	5
	PROFILE	INVOLUTE
	PRESSURE ANGLE	20°
	HEIGHT CO-EFFICIENT	0.6
	ADDENDUM	3.
	DEDENDUM	4.25
NUMBER OF TEETH		80
CORRECTION FACTOR		-0.5
PITCH CIRCLE DIAMETER		400
VALUES TO BE CHECKED		
EMBRACING DIMENSION OVER 9 TEETH (PITCH DIMENSION)		-0.2 129.36 -0.55
VARIATION OF PITCH DIMENSION WITHIN LIMITS OF ONE TOOTHED RIM		0.2
PLAY OF TOOTHED RIM ALONG ROLLER WITH RESPECT TO SURFACE A		0.4
TEETH SURFACE FINISH		▽5

1. PATTERN DRAFTS SHOULD NOT EXCEED 2°.
2. UNSPECIFIED CASTING RADII SHOULD BE 3 mm
3. ALTERNATE MATERIAL IS CASTING 32X06Л-III-KT 45, GOST B,Д 977-77
4. OTHER REQUIREMENTS PLACED UPON CASTING ARE AS PER TECHNICAL REQUIREMENTS TT 25011 00001
5. UNSPECIFIED LIMIT DEVIATIONS OF DIMENSIONS OF MACHINED SURFACES ARE AS FOLLOWS: FOR HOLES - AS PER A7, SHAFTS - AS PER B7, OTHERS - AS PER CM8. CASTING DIMENSIONS $^{+1.5}_{-1.0}$ mm UPTO 200 mm AND $^{+2}_{-1}$ mm OVER 200 mm
6. ABSENCE OF CHAMFER WITH MENTIONED DIMENSIONS 2 AND 45° IS ALLOWED IN THE ZONE OF SLOT Б OF LUGS
7. PITCH DIMENSION OVER NOT MORE THAN 5 TEETH MAY BE LOOSENED BY UPTO 0.2 mm BEYOND TOLERANCE EXCLUDE SPECIFIED TEETH FROM CHECKING FOR RUN-OUT
8. DISPLACEMENT OF AXES OF HOLES FROM TRUE POSITION SHOULD NOT EXCEED 0.2 mm
9. MISALIGNMENT OF PLANES OF SYMMETRY OF TOOTH SPACE E AND SLOT Б SHOULD NOT EXCEED 0.3 mm.
10. NON-SQUARENESS OF COMMON AXIS OF HOLES B TO AXIS OF SLOT Б AND ALIGNMENT OF HOLES B SHOULD BE CHECKED WITH GAUGE Ø 11-95X13.8
11. RELATIVE POSITION OF 3 SLOTS Б SHOULD BE CHECKED WITH COMBINATION GAUGE WITH DIMENSIONS Ø 240 AND 13.6
12. BALANCE STATIC UNBALANCE WITH RESPECT TO AXIS OF SURFACE A SHOULD NOT EXCEED 80 g cm
13. WHEN BALANCING SURFACE Д FOR DIMENSION H MILLING IS ALLOWED.
14. DARK SPOTS ARE ALLOWED ON SURFACE Ж.
15. COATING CADMIUM PLATED, 9 MICRONS THICK, OILED. REMOVE HYDROGEN EMBRITTLEMENT DO NOT CHECK UNMACHINED SURFACES FOR THE PRESENCE OF COATING ABSENCE OF COATING IN HOLES K IS ALLOWED.
16. NON-FLATNESS OF SURFACE Л SHOULD NOT EXCEED 0.15 mm
    STRAIGHTENING WITH DAMAGE OF COATING IN STRAIGHTENED PLACES IS ALLOWED SUPPLY SPARE PARTS IN BULK WITHOUT DAMAGING CADMIUM COATING.
17. MARK LETTER M OPPOSITE TO HOLLOW E ON SURFACE И.
18. HB 217 TO 269 (Ø 4.1 TO 3.7).

(A) ZINC PLATING IS ALLOWED, PLATING THICKNESS & OTHER CONDITIONS SHALL REMAIN SAME.

29/04/03	⑧	DO. CORRECTION, DIMENSION 6.6 WAS 5.6.
00007-ICV 18-10-88	(A)	ZINC PLATING ADDED AS ALTERNATIVE (SOVIET SPECIALISTS APPROVED DEVIATIONS)
DC(I) No. & DATE	ISSUE	NATURE
AMENDMENTS		

APPROVED	M VASU	765-12-2	148 OF 453
CHECKED			
CONTROLLERATE OF INSPECTION (ICV)		PRESSURE DISC	WEIGHT 6.722 / SCALE 1:1
		STEEL 35XHATT 25011 00001	SMT / SHTS