765-71-1309

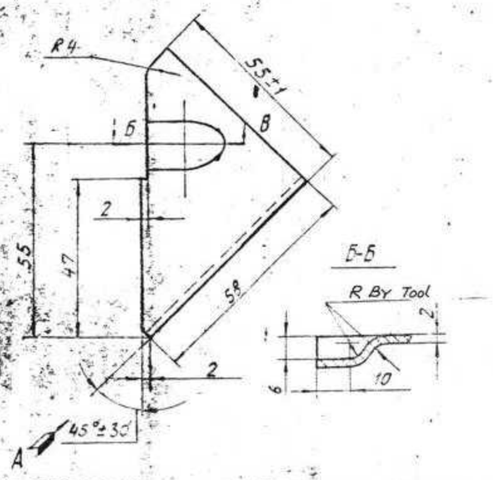

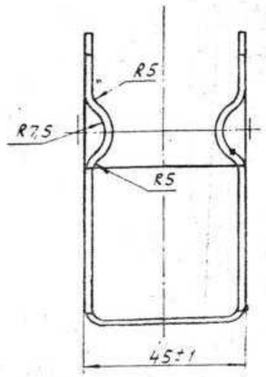

VIEW A

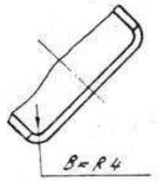

1. Burrs are not allowed.
2. Provide dimensions without deviations with an accuracy of ±0.5 mm.
3. Provide dimension B equal to $R8_{-0.5}$.

765-71-1309

SNO	SHT	DOC NO	SIGN	DATE
DRAWN		CH.V.RAO.		26.7.84
EDT & CHKD		A.A. OKLEY		30.7.84
F/M, DC,		S.R.NAIR		30.7.84
DIV.OFFR		T.K.BANERJEE		1.8.84
		NAME	SIGN	DATE

WALL

SHEET AM-5M-2, FOCT 21631-76.

SHEET	WEIGHT	SCALE
	0.034	1:1

TOTAL SHEETS 1

765-71-1309

EXPLANATORY NOTES TO TECHNICAL CONDITIONS

① WALL SHOULD BE FABRICATED FROM ANNEALED (M) ALUMINIUM ALLOY SHEET 2MM THICK WITH NORMAL FINISH & NORMAL ACCURACY OF GRADE AMg5. HAVING MECHANICAL PROPERTIES AS PER GOST 21631-76 AND CHEMICAL COMPOSITIONS AS PER GOST 4784-74 (AS REFFERED IN GOST 21631-76)

(i) CHEMICAL COMPOSITIONS

GRADE	CONTENTS ELEMENTS % ALUMINIUM	MAGNESIUM	MANGANESE	TITANIUM	BARYLLIUM
AMg5	BASE	4.8 - 5.8	0.3 - 0.8	0.02 - 0.10	0.0002 - 0.005

IMPURITIES MAX

IRON	SILICON	COPPER	ZINC	OTHER IMPURITIES EACH INDIVIDUALLY	TOTAL
0.6 %	0.5 %	0.1 %	0.2	0.05 %	0.1 %

(ii) MECHANICAL PROPERTIES (AS PER GOST 21631-76)

TENSILE STRENGTH ——— 28 KgF/MM2
YIELD POINT ——— 15 KgF/mm²
PERCENTAGE ELONGATION ——— 15%

② TOLERANCE ON SHEET THICKNESS SHOULD BE −0.15 mm.

SURFACE FINISH

~ :- INDICATES SURFACE FINISH OF Ra VALUE IN 80μ ON THOSE SURFACES WHERE SURFACE ROUGHNESS IS NOT SPECIFIED.

DCN	DATE	ZONE	BRIEF RECORD	SIGN

INSCRIBED	
CHECKED	
APPROVED	
DATE	16.11.84
TOLERANCE UNLESS OTHERWISE SPECIFIED GEN | DEC | ANG	

DRG NOT TO BE SCALED
ALL SHARP EDGES & CORNERS TO BE ROUNDED OFF
ALL DIMENSIONS ARE IN MM UNLESS OTHERWISE SPECIFIED

WALL

SCALE:-

PERTAINS TO

765-71-1309

CONTROLLER ATE OF INSPECTION FIRE FIGHTING EQPT PUNE

Easy2Convert
www.easy2convert.com

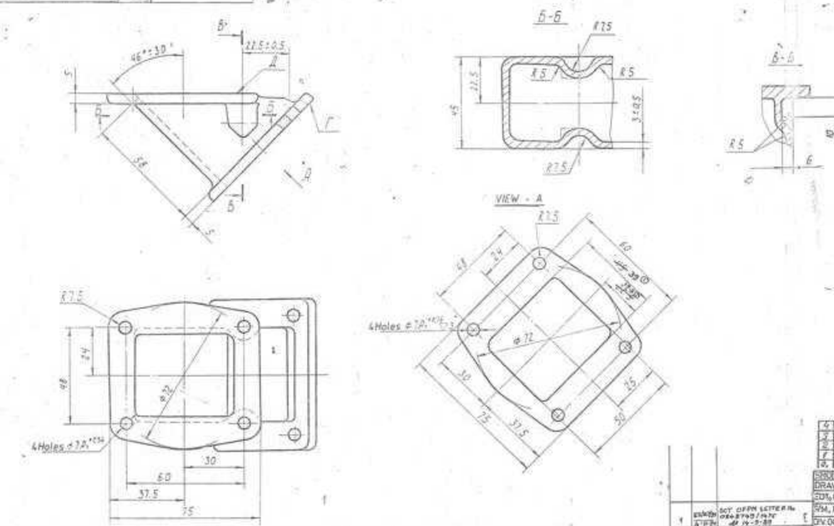

1. Made by pressure-die-casting.
2. Unspecified casting radii should be R3 mm.
3. Pattern drafts should not exceed 2°.
4. Displacement of axes from true position should not exceed 0.25 mm.
5. Unspecified limit deviations of dimensions are as follows:
   For holes - as per A_7,
   for shafts - as per B_7 and
   for others - as per half of tolerance values of class 8.
6. Warping of mating surfaces Г and Д should not exceed 0.3 mm.
7. Pusher traces of a depth not exceeding 0.5 mm are allowed on surface Г.
8. Adaptor may be made along conventional dotted line.
9. Coating: Anodic oxidation, chromatizing or chemically parkerized blue chromatizing. Apply primer ФЛ-03-Ж GOST 9109-76, onto external surfaces and paint them with enamel ПФ-223, White-1 GOST 14923-78.
10. Other requirements for casting are as per Technical Specifications ТУ АЛ-370.
11. Alternate material is АЛ2, GOST 2685-75.

4	-	1303-33-22	Шайба		
3	-	1047-72-79	Винт М4х8		
2	-	1198-3-76	Шайба		
1	-	1303-11-78	Корпус		
Pos.	Кол.	Обозначение	Наименование	Материал	Масса

1	21.03.84	Вот оффи letter No 0184/793/79 от 19-5-80			
Изм.	Дата	REFERENCE			

765-71-1309-К

ADAPTOR

SHEET	WEIGHT	SCALE
1	0.05	4:1
TOTAL SHEETS		

Material: АЛ9 ГОСТ 2685-75

BROUGHT DOC. NO		IRON	DATE
DRAWN	Dev Raj	Dev Raj	25.6.84
CONS. CHKD	K. Sankar	Gowri	26.6.84
MM. DC	S.R. Rao	M.	26.6.84
CH. OFF RE	J. Ramesh	Ramesh	27.6.84
	NAME	SIGN	DATE

Translated
Checked
Inscribed

765-71-1309-K

EXPLANATORY NOTES TO TECHNICAL CONDITIONS

(I) ADAPTOR SHOULD BE MANUFACTURED FROM ALUMINIUM PRESSURE DIE CASTING ALLOYS GRADE АЛ9 OR АЛ2 OF GOST 2685-75. THE CHEMICAL COMPOSITIONS ARE GIVEN BELOW.

GRADE OF ALLOYS	CHEMICAL COMPOSITIONS %		
	ALUMINIUM	MAGNESIUM	SILICON
АЛ9	BASE	0.2 - 0.4	6.0 - 8.0
АЛ2	BASE	-	10.0 - 13.0

ADMIXTURES

ADMIXTURES COMPONENTS %	GRADES		ADMIXTURES COMPONENTS %	GRADES	
	АЛ9	АЛ2		АЛ9	АЛ2
	MAXIMUM			MAXIMUM	
IRON	1.90	1.50	LEAD	0.05	-
MAGNESIUM	-	0.10	TITANIUM	-	0.10
MANGANESE	0.50	0.50	BERILIUM	0.10	-
COPPER	0.20	0.60	ZIRCONIUM	0.15	0.10
ZINC	0.50	0.50	TOTAL	2.00	2.70
TIN	0.01	-			

(II) MECHANICAL PROPERTIES

GRADE OF ALLOYS	PARTIAL RESISTANCE	SPECIFIC ELONGATION	HARDNESS, BHN
	MAXIMUM		
АЛ9	17 kg/mm²	1%	50
АЛ2	16 kg/mm²	1%	50

(III) UNSPECIFIED LIMIT DEVIATIONS OF DIMENSIONS OF A_7 AND B_7 ARE GIVEN BELOW.

FOR HOLES - H14
FOR SHAFTS - h14

(IV) COATING:-
ANODIC OXIDATION CHROMATISED OR CHEMICALLY PARKERIZED BLUE CHROMATISED, BEFORE EXPANSION EXTERNAL SURFACE OF THE 'ADAPTOR' SHALL BE APPLIED WITH PRIMER, CONFORMING TO IS: 5660-70, THE PIPE SHALL BE PAINTED WITH PAINT CONFORMING TO IS: 2932-74 (SHADE NO 365 OF IS: 5-78)

(V) SURFACE FINISH
∇4 (▽) :- REPRESENTS THE SURFACE FINISH TO BE OBTAINED IN 4 μ VALUE 10 μ MAX. ON THOSE SURFACES WHERE SURFACE FINISH IS NOT SPECIFIED.

INSCRIBED	Amit	DRG NOT TO BE SCALED	PERTAINS TO
CHECKED	[illegible]	ALL SHARP EDGES & CORNERS TO BE ROUNDED OFF.	
APPROVED	[illegible]	ALL DIMENSIONS ARE IN mm UNLESS OTHERWISE SPECIFIED	
DATE	[illegible]	ADAPTOR	765-71-1309-K
TOLERANCE UNLESS OTHERWISE SPECIFIED GEN. DEC ANG		SCALE:- —	
		CONTROLLERATE OF INSPECTION FIRE FIGHTING 109T. PUNE	

DC(I)	DATE	ZONE	BRIEF RECORD	SIGN

1-3-88

Easy2Convert www.easy2convert.com

765 - 71 - 1310

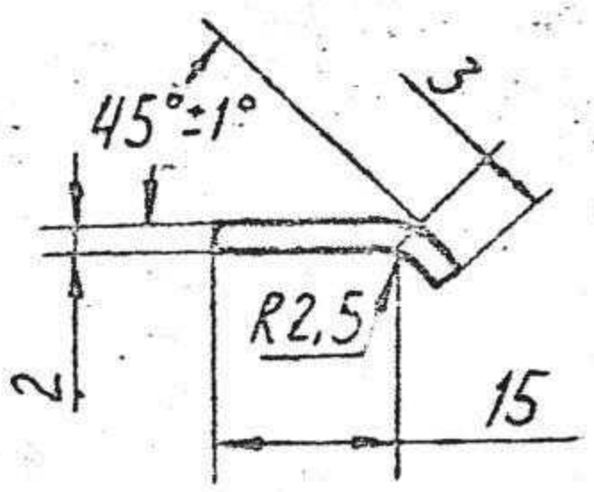

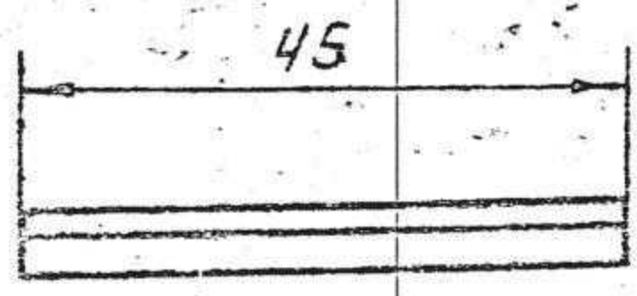

1) Burrs are not allowed.

2) Provide dimensions without deviations with an accuracy of ± 0,5 mm.

REFER TO DRG NO 765-71-1309 FOR MATERIAL DERIVATIVES

SURFACE FINISH

∿ REPRESENTS THE SURFACE FINISH TO BE OBTAINED IN Ra VALUE 80 μ Max ON THOSE SURFACES WHERE SURFACE FINISH IS NOT SPECIFIED

(R. VEERARAGHAVAN)
SSO-II

CIFE, PUNE

765 - 71 - 1310

SNO	SHT	DOC NO	SIGN	DATE
DRAWN		Y.R.Ganesh		30.7.84
EDT&CHKD		D.K. JAIN		30.7.84
F/M, DC.		S.R.NAIR		31.7.84
DIV.OFFR		T.K.BANERJEE		31.7.84
		NAME	SIGN	DATE

WALL

SHEET AM - 5M - 2
ГОСТ 21631-76.

SHEET	WEIGHT	SCALE
	0.005	1:1

TOTAL SHEETS

Easy2Convert
www.easy2convert.com

1-3-A4-2-3/A

765-71-1429

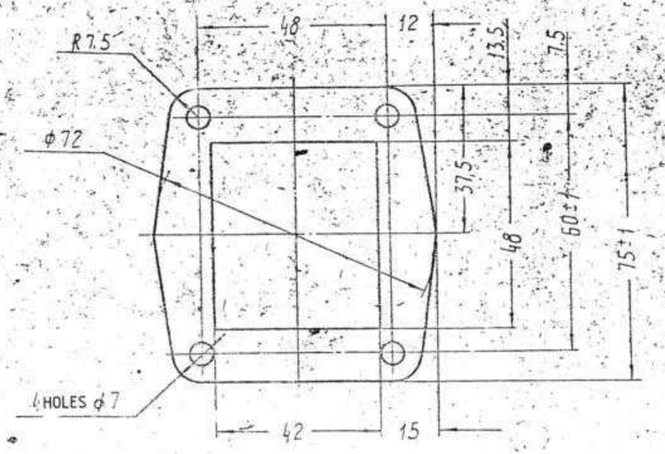

Thickness 3±0,5

1. Alternate material is rubber 632, Ty 005216-75.
2. Rest of requirements are as per technical specification Ty 005216-75 for the item of code 254311.

765-71-1429

S.NO	SHT	DOC NO	SIGN	DATE
DRAWN		V.J.RAO		22.8.84
EDT & CHKD		A.K. Dubey		
F/M, DC.		S.R.NAIR		24.8.84
DIV OFFR		T.K. BANERJEE		31.8.84
		NAME	SIGN	DATE

GASKET

Plate 254311-3

Rubber 637 Ty 005216-7

SHEET	WEIGHT	SCALE
	0.035	1:1

TOTAL SHEETS

765-71-1429

EXPLANATORY NOTES TO TECHNICAL CONDITIONS

1. GASKET SHOULD BE MANUFACTURED FROM NEOPRENE RUBBER GRADE OF 637 OR 632 TO Ty - 005216 - 75

PHYSICAL, MECHANICAL, TECHNOLOGICAL PROPERTIES OF RUBBER GIVEN AS BELOW:-

1) TYPE OF RAW RUBBER —— CKMC - 30
APKM - 15

2) MODE OF VULCANIZATION & THERMO STATTING —— ① TEMP. - 143°C ± 3
② TIME - 40 MIN.

3) ULTIMATE TENSILE STRENGTH DURING BREAKAGE —— 45 Kgf/cm² MINIMUM.

4) RELATIVE ELONGATION DURING BREAKAGE —— 250 % MINIMUM.

5) RELATIVE RESIDUAL ELONGATION AFTER BREAKAGE. —— 35 % MAXIMUM.

6) SHORE HARDNESS —— 45 - 65.

7) HEAT AGEING IN AIR —— ① TEMP. — 70°C
② TIME. — 96 Hrs.
③ AGEING CO-EFFICIENT AS PER RELATIVE ELONGATION. — 0.70% (MIN)

8) CO-EFFICIENT OF ACID-ALKALI RESISTANCE FOR 24 Hrs. AT ATEMP. OF 15-25°C AS PER STRENGTH. —— ① 20 % SOLUTION OF SULPHURIC ACID OR HYDROCHLORIC ACID. — 0.75% MIN.
② 20% NaOH OR KOH SOLUTION — 0.75% MIN.

9) DENSITY (WITH LIMIT DEVIATION OF ± 0.05) —— 1.35 g/cm³

254311 — ROLLED TECHNICAL PLATES WITHOUT CLOTH LINERS

ALTERNATE MATERIAL :-

PHYSICAL, MECHANICAL PROPERTIES OF RUBBER GRADE -632

1) TYPE OF RAW RUBBER —— NAIRIT CKMC -30 APKM -15

2) RUPTURE STRENGTH AT LEAST Kgf/cm² —— 50

3) ELONGATION AT RUPTURE AT LEAST % —— 300

4) PERMANENT ELONGATION AFTER RUPTURE % MAX. —— 4.0

5) HARDNESS ~~AS PER DEVICE~~ SHORE ~~ARBITRARY UNIT VALUE~~ —— 45 - 65

6) CO-EFFICIENT OF THERMAL AGEING IN AIR.
a) TEMP. °C —— 70
b) PERIOD, HOUR —— 96
c) AS PER ELONGATION AT LEAST —— 0.60

7) VARIATION IN MASS UNDER THE INFLUENCE OF MEDIUM % MAX.
a) RUBBER SOLVENT KALOSHA — 95 P/W + BENZENE — 5 P/W AT ATEMP. 15-25°C FOR 24 Hrs. } 30.0
b) OIL MT - 16 IT AT TEMP. 70°C FOR 24 Hrs. —— ACTUAL

8) DENSITY g/cm³ —— 1.35

DC(I)	DATE	ZONE	BRIEF RECORD	SIGN

INSCRIBED	
CHECKED	
APPROVED	
DATE	25.11.86

TOLERANCE UNLESS OTHERWISE SPECIFIED. GEN. | DEC. | ANG.

DRG. NOT TO BE SCALED

ALL SHARP EDGES & CORNERS TO BE ROUNDED OFF.

ALL DIMENSIONS ARE IN MM. UNLESS OTHERWISE SPECIFIED.

GASKET

SCALE:

PERTAINS TO

765-71-1429

CONTROLLERATE OF INSPECTION FIRE FIGHTING EQPT. PUNE.

1-3-42

Easy2Convert
www.easy2convert.com

765-71-1446

∽ UNLESS OTHERWISE SPECIFIED.

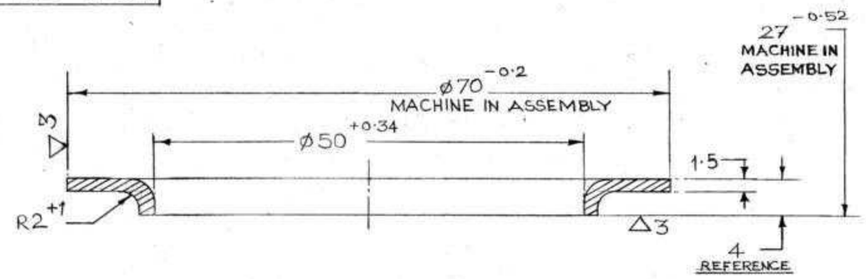

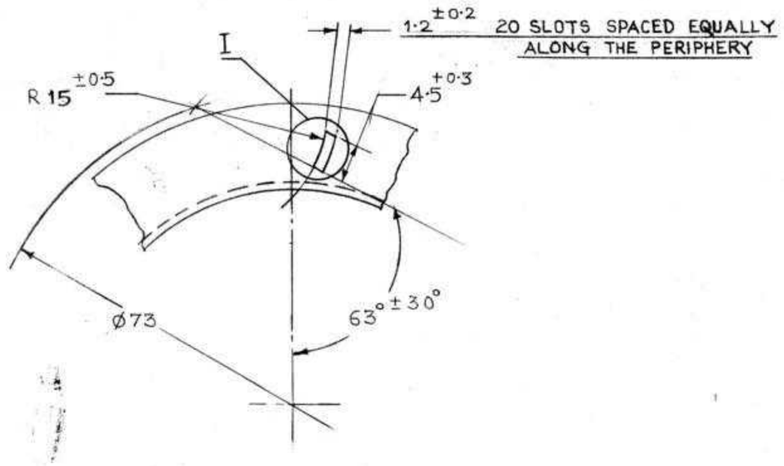

I
SCALE- 5:1

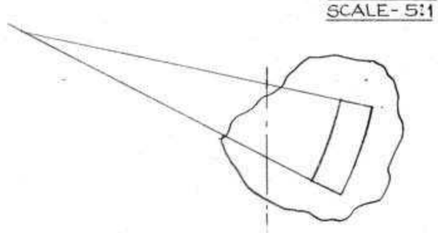

MATL- SHEET AMг-6 БМ-1·5 GOST-21631-76

1) REMOVE SHARP EDGES.
2) DEVIATION OF SLOTS FROM TRUE POSITION IS 0·5 MAXIMUM.
3) PART MAY BE MADE AS PER CONVENTIONAL DOTTED LINE.
4) TYPE OF COATING — ANODIC OXIDISATION, CHROMATISATION.

EXPLANATORY NOTES TO TECHNICAL CONDITIONS

RING SHOULD BE FABRICATED FROM CLADDED (B) & ANNEALD (M) ALUMINIUM ALLOY SHEET 1·5 mm THICK WITH NORMAL FINISH & NORMAL ACCURACY OF GRADE AMg 6 HAVING COMPOSITIONS AS PER DRG No 675-71-354 AND MECHANICAL PROPERTIES AS PER GOST 21631-36.

CHEMICAL COMPOSITIONS OF CLADDING MATERIAL

CHEMICAL COMPOSITIONS OF CLADDING MATERIAL %										
GRADE	ALLOY ELEMENTS	ADMIXTURE (max)								
	Al	Fe	Si	Cu	Mn	Zn	Ti	Mg	OTHER ADMIXTURE	SUM OF TOTAL PERMISSIBLE ADMIXTURE
AMg6	99·30 (min)	0·30	0·30	0·02	0·025	0·1	0·15	0·05	0·02	0·70

MECHANICAL PROPERTIES

TENSILE STRENGTH — 32·0 kgf/mm² (min)

YIELD POINT — 16·0 kgf/mm² (min)

ELONGATION % — 15·0 (min)

THICKNESS OF TECHNOLOGICAL CLADDING LAYER FOR SHEETS FROM ALLOY AMg6 SHOULD BE ON EACH SIDE OF SHEET NOT MORE THAN 1·5 % FROM NORMAL SHEET THICKNESS.

TOLERANCE ON SHEET THICKNESS SHOULD BE −0·15 mm.

SURFACE FINISH

▽3 — REPRESENTS SURFACE FINISH TO BE OBTAINED OF Ra VALUE IN 20 μ (MAX)

∽ — REPRESENTS SURFACE FINISH TO BE OBTAINED OF Ra VALUE IN 80 μ ON THOSE SURFACES WHERE SURFACE FINISH IS NOT SPECIFIED.

DC(1)	DATE	ZONE	BRIEF RECORD	SIGN
			DRG RETRACED ON DT. 22 JUL 2004	

DRN	sd
TCD	-
CHKD	sd
	sd
PSD	-
APPD	sd
DATE	16 OCT 86

TOLERANCE UNLESS OTHERWISE SPECIFIED GEN, DEC, ANG

DRG NOT TO BE SCACED.
ALL SHARP EDGES AND CORNERS TO BE ROUNDED OFF
ALL DIMENSIONS ARE IN mm UNLESS OTHERWISE SPECIFIED

RING

SCALE- 2:1

PERTAINS TO

765-71-1446

C Q A F E, AUNDH CAMP, PUNE-27

1-3-A1

1664

AUTHENTICATION.	TCD	CHD	PSD	DATE	DRG BASED ON	W/O No CQAFE/FPS
	BLR			26-7-04	-	MISC dt 03 De

1-3-A1

Easy2Convert
www.easy2convert.com

765-71-1507

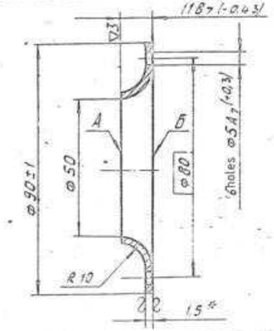

1. Alternate material is AMГ2, GOST 4784-74.
2. Unspecified limit deviations of dimensions are ±0,5mm.
3. Displacement of axis of hole from true position should not exceed 0,2mm.
4. Nonflatness of surfaces A and Б should not exceed 0,4mm.
5. Nonparallelism of sufaces A and Б should not exceed 0,4mm over length 90.
6. Type of coating: Anodic oxidation, chromatizing.
7. Dimensions with (*) is for reference.

SIG	SHT	DOC NO	SIGN	DATE	765-71-1507	SHEET WEIGHT SCALE
DRAWN		V.J.RAO		22.8.88	FLANGE	0.022 1:1
EDT & CHKD						TOTAL SHEETS
P/M, DC		S.R.NAIR			Sheet AMцМ-1.5 ГОСТ 21631-76	
DIV. OFF R.						
		NAME	SIGN	DATE		

EXPLANATORY NOTES TO TECHNICAL CONDITIONS

I) FLANGE SHOULD BE MANUFACTURED FROM ALUMINIUM ALLOY SHEET 1·5 mm THICKNESS, GRADE AMцS, ANNEALED, WITH NORMAL SURFACE FINISH AND NORMAL MANUFACTURING ACCURACY, HAVING CHEMICAL COMPOSITION CONFORMING TO GOST-4248-74 (AS REFRRED IN GOST-21631-76) AS FOLLOWS :-
ALTERNATE MATERIAL :- ALTERNATIVELY ALUMINIUM ALLOY SHEET OF GRADE AMg 2, CAN ALSO BE USED. CHEMICAL COMPOSITION AS PER GOST-4784-74 IS AS GIVEN BELOW

CHEMICAL COMPOSITION

GRADE	ALLOYING CONSTITUENTS %			IMPURITIES % MAXIMUM							
	ALUMINIUM	MAGNASIUM	MANGANESE	IRON	SILICON	COPPER	ZINC	TITANIUM	OTHER IMPURITIES		
										EACH INDIVIDUALLY	TOTAL
AMцS	BASE CONSTITUENTS		1·0 - 1·6	0·7	0·6	0·15	0·10	0·20	MAGNASIUM 0·2	0·05	0·10
AMg 2	- DO -	2·0 - 2·7	0·2 - 0·6	0·4	0·4	0·10	0·20	0·10	CHROMIUM 0·0·5	0·05	0·10

II) MECHANICAL

II) MECHANICAL PROPERTIES (GOST-21631-76)

	AMцS M	AMg 2
I) MATERIAL CONDITION	ANNEALED	WITHOUT HEAT TREATMENT
II) TENSILE STRENGTH Kg/mm² (min)	9·0	18·0
III) YIELD POINT Kg/mm² (min)	–	–
IV) PERCENTAGE ELONGATION (min)	22·0	7·0

III) TOLERANCE ON SHEET THICKNESS

THICKNESS	TOLERANCE
1·5 mm	-0·20 mm

IV) SYMBOLS

⌀80 ON DIMENSIONS SHOWN IN RECTANGLES, TOLERANCES ARE NOT SPECIFIED BUT THESE ARE NOT "FREE DIMENSIONS"

V) SURFACE FINISH

∇3 - INDICATES SURFACE FINISH TO BE OBTAINED BY ANY PRODUCTION METHOD OF Ra VALUE 20 MICRONS (MAX)

~ - INDICATES SURFACE ROUGHNESS IN Ra VALUE, NOT TO EXCEED 80 MICRONS.

∇(∇) - INDICATES SURFACE FINISH TO BE OBTAINED WITHOUT REMOVAL OF MATERIAL ON THOSE SURFACES WHERE SURFACE FINISH IS NOT SPECIFIED

D.C.(I)	DATE	ZONE	BRIEF RECORD	SIGN

INSCRIBED		DRG NOT TO BE SCALED
CHECKED		ALL SHARP EDGES & CORNERS TO BE ROUNDED OFF.
APPROVED		ALL DIMENSIONS ARE IN mm UNLESS OTHERWISE SPECIFIED
DATE		FLANGE
TOLERANCE UNLESS OTHERWISE SPECIFIED GEN DEC ANG		SCALE :-

PERTAINS TO :-

765-71-1507

CONTROLLERATE OF INSPECTION FIRE FIGHTING EQPT PUNE

Easy2Convert www.easy2convert.com

765-71-1525

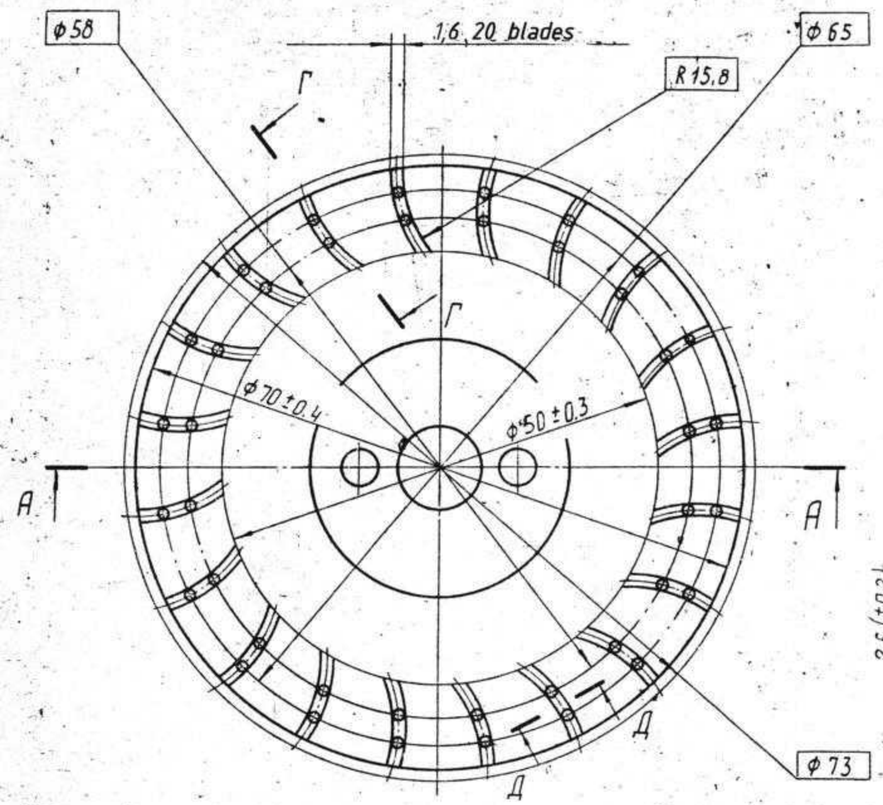

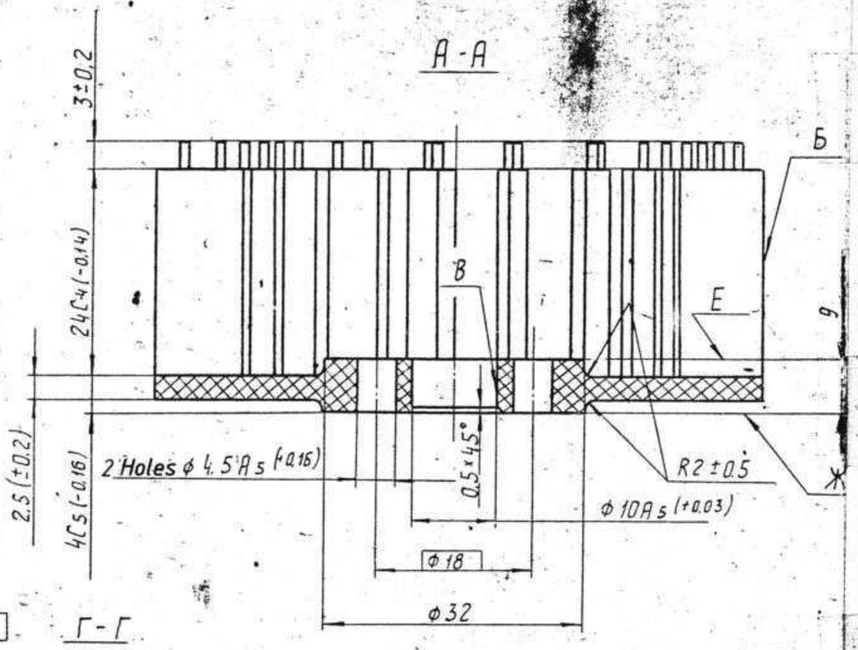

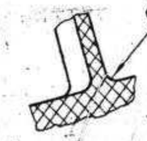

Ф 1,6 for 2 groups by 20 lugs in each.

Easy2Convert
www.easy2convert.com

▽5

1) Unspecified limit deviations of dimensions for holes are as per B_7.

2) Unspecified radii are R 0,5 ± 0,1 mm.

3) Displacements of blades, holes axes and projections from true position should not exceed 0, 3 mm.

4) Run-out of surface Б with respect to axis of surface B should not exceed 0,5 mm.

5) Deformation of blades is not permitted.

6) Non-perpendicularity of blades to the plane of flange should not exceed 0,6mm over the length of blade.

7) Dimension with (*) is for reference.

8) On surfaces E and Ж, shrinkage depression should not exceed 0,5 mm.

9) All dimensions are provided technologically.

ROTOR SHALL BE MANUFACTURED WITH THE MATERIAL POLYAMIDE -610 TO GOST-10589-73.

FOR DETAIL PROPERTIES OF POLYAMIDE -610 REFER DRAWING No. 765-71-cd 610 cd GAUGE.

2) SURFACE FINISH :-

▽5 :- REPRESENTS SURFACE ROUGHNESS IN Rz VALUE NOT TO EXCEED 20 MICRONS.

3) LIMIT DEVIATION FOR HOLE B7 = -250 MICRONS.

DT 25 FEB' 93

(A.B. PATWARDHAN)
SSO II

765-71-1525

SNO	SHT	DOC NO	SIGN	DATE
3	-	765 320-76		

DRAWN	Y.R.Ganesh		23.8.84
EDT&CHKD			
F/M,DC.	S.R.NAIR		31.8.84
DIV.OFFR	T.K.BANERJEE		3.9.84
	NAME	SIGN	DATE

ROTOR

MOULDING-POLYAMIDE - 610
FOCT 10589 - 73.

SHEET	WEIGHT	SCALE
	0.025	2:1

TOTAL SHEETS

765-71-1527

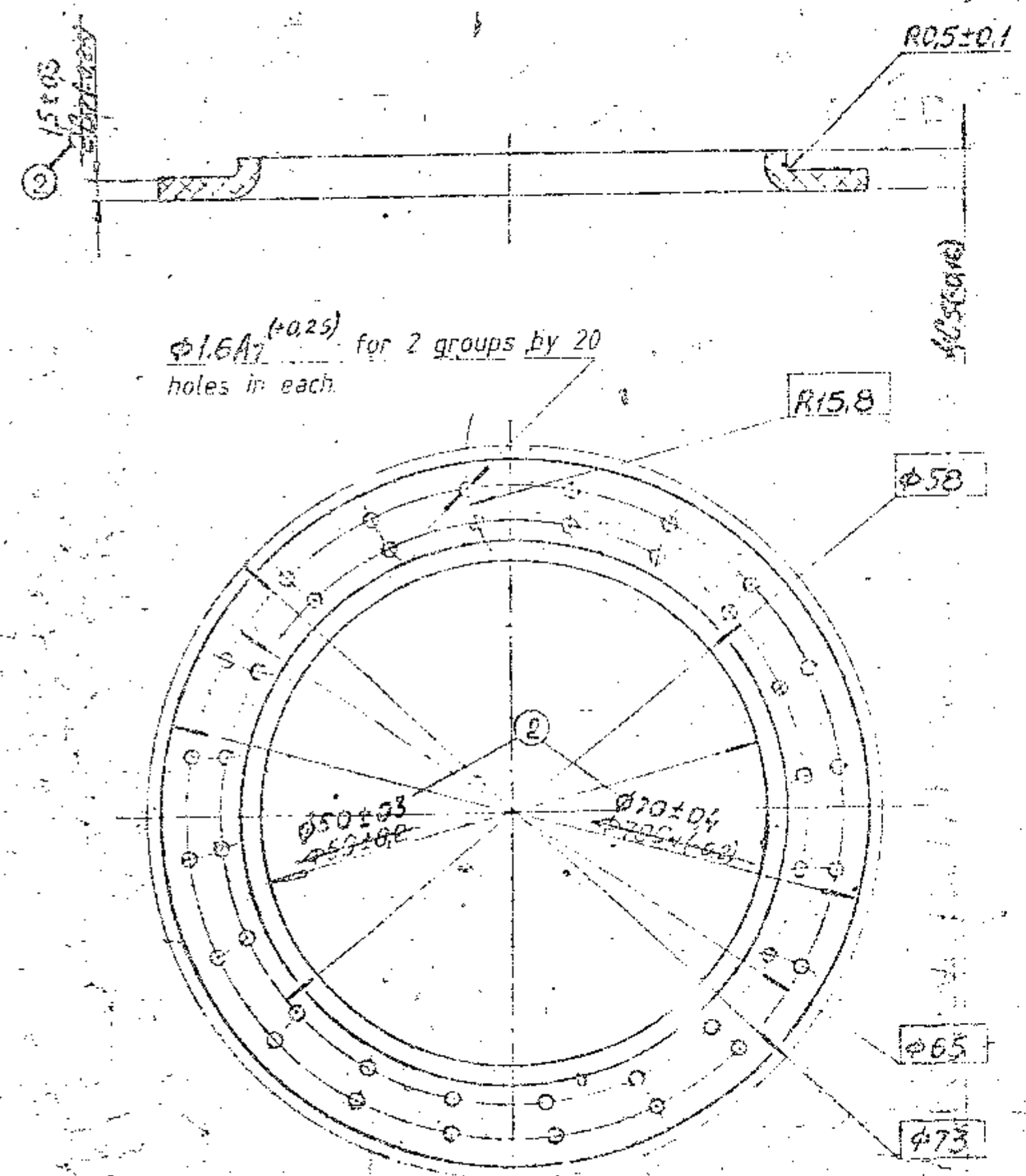

▽5

1). Displacement of axes of holes from true position should not exceed 0.3 mm.

2). Dimensions are provided technologically.

FLANGE SHALL BE MANUFACTURED WITH THE MATERIAL POLYAMIDE-610 TO GOST 10589-73.
FOR DETAIL PROPERTIES OF POLYMIDE-610, REFER DRAWING No 765-71-~~08~~ 6100 ~~0~~ GAUGE.

2] SURFACE FINISH

▽5 :- REPRESENTS SURFACE ROUGHNESS IN Rz VALUE NOT TO EXCEED 20 MICRONS.

(A B PATWARDHAN)
SBO-II
DT. 25 FEB' 93

765-71-1527

SNO	SHT	DOC NO	SIGN	DATE
DRAWN		BHUSHAN		26.7.84
EDT&CHKD		D.K. JAIN		30.7.84
F/M, DC		S.R. NAIR		30.7.84
DIV.OFFR		T.K. BANERJEE		1.8.84
		NAME	SIGN	DATE

FLANGE

Moulding polyamide 610, GOST 10589-73

SHEET	WEIGHT	SCALE
	0.003 0.015	2:1

TOTAL SHEETS

1-3-A3

1-3

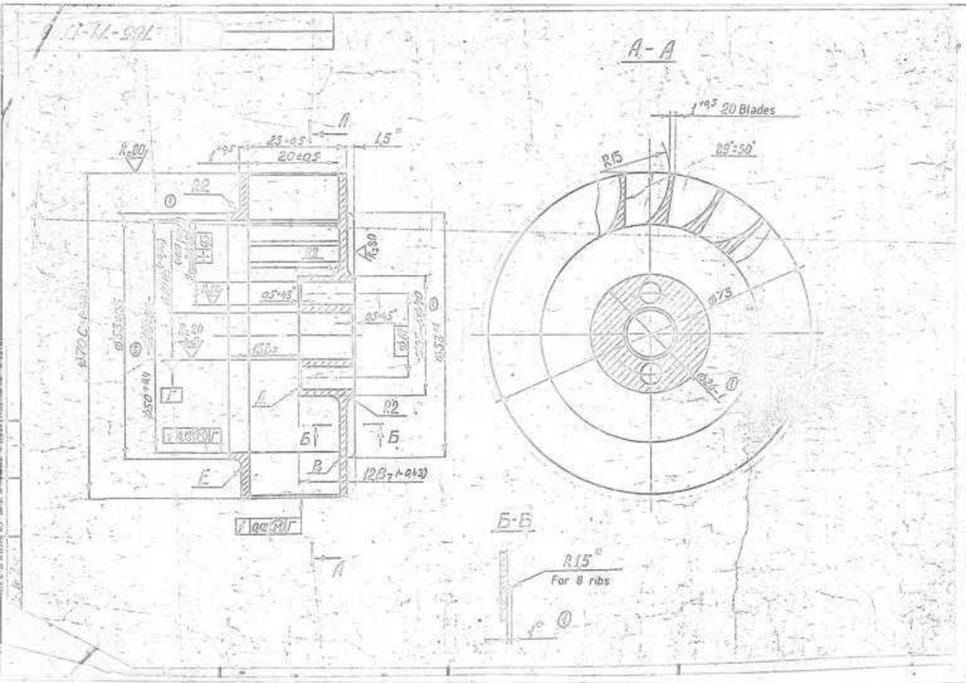

1. Type of casting - pressure-die casting.
2. Casting radius should not exceed 1 mm.
3. Pattern drafts should not exceed 2°.
4. Unspecified limit deviations of dimensions are ±1 mm.
5. Depth of pusher traces on surfaces Д, E, B should not exceed 0.5 mm.
6. Rest of requirements are as per Technical Requirements TTA/I-370.
7. Type of coating: Anodic oxidation chromatizing.
8. Non-perpendicularity of blades to surfaces B should not exceed 0.6 mm.
9. Step on surface B should not exceed 1 mm.
10. * Dimensions are given for reference.

4						
3						
2						
1						
CHANGE	DOC. NO	SIGN	DATE	765-71-1706		
DRAWN	DIV.DAO		25.8.84	ROTOR	SHEET WEIGHT SCALE	
EDT&CHKD	P.K.GOSWAMI					
PRS.D.C.	S.R.NAME				TOTAL SHEETS	
DIV.OFFR	T.C.MANDAL			A/19 ГОСТ 2685-75	Translated	
	NAME	SIGN	DATE		Checked	
					Inscribed	

765-71-1706

EXPLANATORY NOTES TO TECHNICAL CONDITONS

1. ROTOR SHOULD BE MANUFACTURED FROM ALUMINIUM PRESSURE DIE-CASTING ALLOYS OF GRADE А19 OF GOST- 2685-75.
THE CHEMICAL COMPOSITION OF GRADE А19 OF GOST 2685-75 IS AS GIVEN BELOW:—

GROUP OF ALLOYS	GRADE OF ALLOYS	CHEMICAL COMPOSITIONS %			
		BASIC COMPONANTS			ADMIXTURE NOT MORE THAN
		ALUMINIUM	MAGNASIUM	SILICON	IRON Fe
ALLOY ON ALUMINION & SILICON BASE	А19	BASE	0.2-0.4	6.0-8.0	1.50

CHEMICAL COMPOSITION % ADMIXTURE NOT MORE THAN												
GRADE OF ALLOY	Mg	Si	Mn	Cu	Zn	Sn	Pb	Ni	Ti	BERILLIUM	ZIRCONIUM	TOTAL CALCULATED ADMIXTURE
А19	-	-	0.50	0.20	0.30	0.01	0.05	-	-	0.10	0.15	2.0

2. MECHANICAL PROPERTIES —

PARTIAL RESISTANCE kgf/mm²	SPECIFIC ELONGATION %	HARDNESS AS PER BRINELL HB.
NOT	MORE	THAN
17	1	50

3. SURFACE FINISH :—

(✓) :- INDICATES SPECIFIED ROUGHNESS TO BE OBTAINED BY ANY PRODUCTION METHOD WITHOUT REMOVAL OF MATERIAL.

Ra 20 :- THE Ra VALUE OF SURFACE FINISH TO BE OBTAINED BY ANY PRODUCTION METHOD IS NOT MORE THAN 20 μ.

Ra 80 :- THE Ra VALUE OF SURFACE FINISH TO BE OBTAINED BY ANY PRODUCTION METHOD IS NOT MORE THAN 80 MICRONS.

↗ 0.18 Ⓜ Γ :- REPRESENTS RUN OUT OF INDICATED DIMENSION TO BE WITHIN 0.18 mm FROM THE BASE INDICATED Γ AT MAXIMUM METAL CONDITION.

Γ :- INDICATES SURFACE Γ

φ 6.5 A7
+ 0.3 :- DISPLACEMENT OF HOLE ON AXES TO BE WITHIN 0.3 mm

NOTE :- FOR OTHER REQUIREMENTS AS PER TTA/I-370 MAY BE REFFERED TO CIFE, DIGHI, PUNE-15

								INSCRIBED		DRG. NOT TO BE SCALED.	PERTAINS TO
								CHECKED		ALL SHARP EDGES & CORNERS TO BE ROUNDED OFF	
								APPROVED		ALL DIMENSIONS ARE IN MM. UNLESS OTHER WISE SPECIFIED	
								DATE		ROTOR	765-71-1706
DOC(S)	DT.	ZONE	BRIEF RECORD	SIGN.				TOLERANCE UNLESS OTHER WISE SPECIFIED GEN. DEC. ± AND		SCALE:	
										CONTROLLERATE OF INSPECTION FIRE FIGHTING EQPT. PUNE	

1-3-AB

Easy2Convert
www.easy2convert.com

765-71-1710

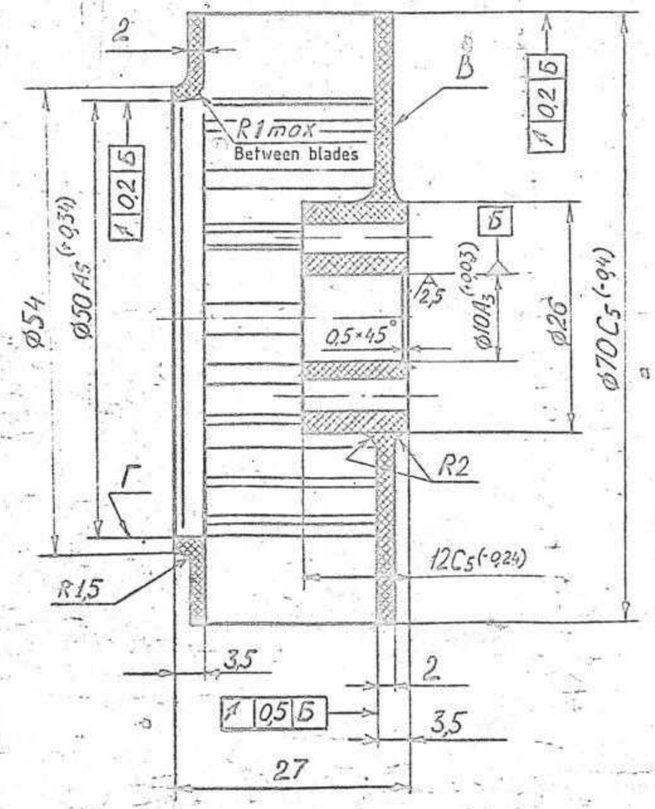

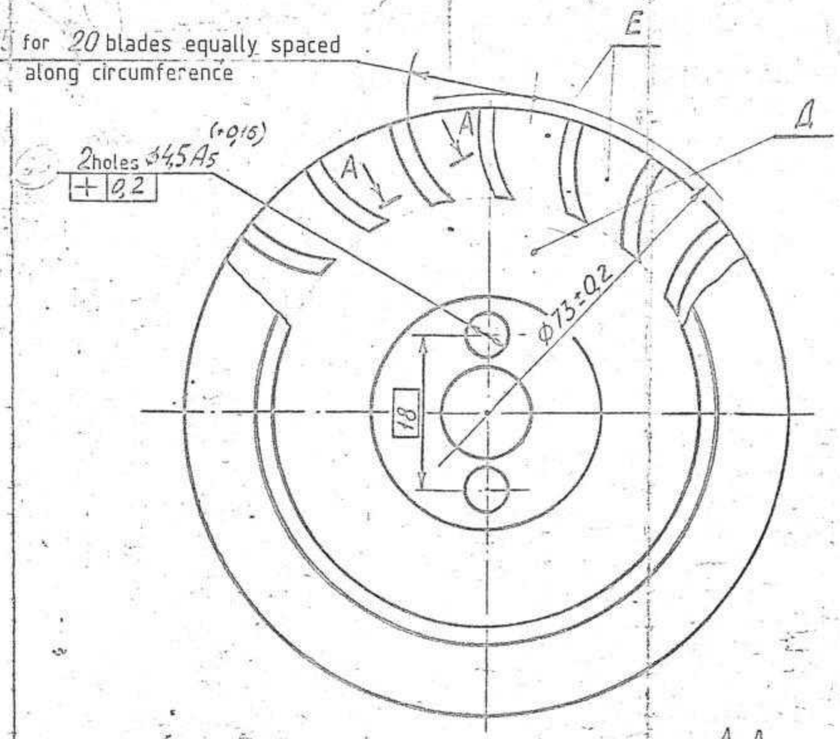

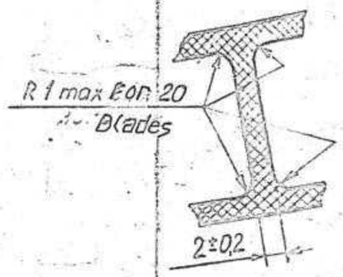

2. Pattern draft should not exceed 1°.
3. Unspecified radii should not exceed 0,5mm.
4. Unspecified limit deviations of dimensions are as per CM7.
5. Nonperpendicularity of blade with respect to surface B should not exceed 0,5mm over blade length.
6. Displacement of blades fron true position should not exceed 0,2mm.
7. Sinking or pojecting of blade with respect to surface Г should not exceed 0,5mm.
8. Projecting of surfaces E with respect to surface Д should not exceed 0,5mm.
9. Rest of requirements are as per OCT 4Г0.005.051.

REFER TO DRG No 765-71-1711 FOR EXPLANATORY NOTES REGARDING POLYAMIDE 610,

SYMBOLS

[18] ON THE DIMENSIONS 18 TOLERANCE IS NOT SPECIFIED BUT IT IS NOT A "FREE DIMENSION"

[0·5 Б] REPRESENTS RUN OUT OF INDICATED DIMENSION TO BE WITHIN 0·5mm FROM THE BASE INDICATED AS Б

[0·2 Б] REPRESENTS RUN OUT OF INDICATED DIMENSION TO BE WITHIN 0·2mm FROM THE BASE INDICATED AS Б

[Б] BASE IS [Б]

[+ 0·2] DISPLACEMENT OF HOLES ON AXES TO BE WITHIN 0·2mm

SURFACE FINISH

2·5 REPRESENTS SURFACE FINISH TO BE OBTAINED BY MACHINING IN Ra VALUE 2·5μ max

CIFE PUNE (R.VEERARAGHAVAN)

765-71-1710

S.NO	SHT	DOC NO	SIGN	DATE
DRAWN		V.J.RAO		25.8.84
EDT. CHKD				
F/M, DC		S.R.NAIR		
DIV.OFF R.		T.K.BANERJEE		1.9.84
		NAME	SIGN	DATE

ROTOR

Polyamide 610, moulding, ГОСТ 10589-73

SHEET	WEIGHT	SCALE
	0,020	2:1

TOTAL SHEETS

TRANSLATED

CHECKED

INSCRIBED

Easy2Convert
www.easy2convert.com

1-4-1-3-42-1

765-71-1752

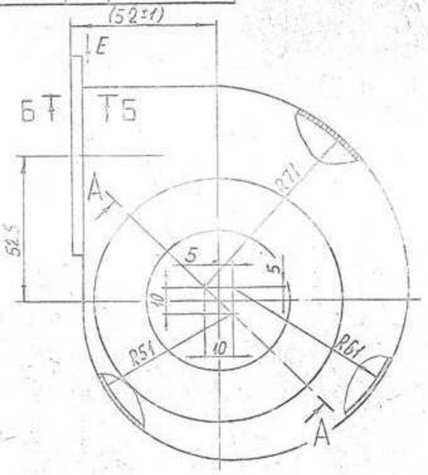

A-A

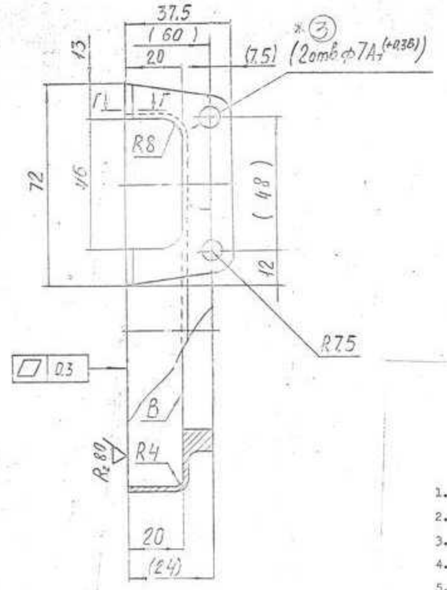

Б-Б

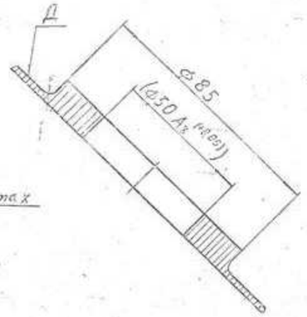

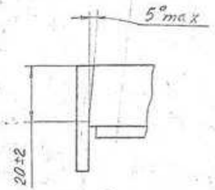

① B и E

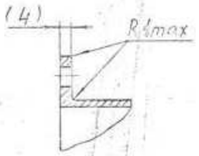

② Г-Г
М2:1

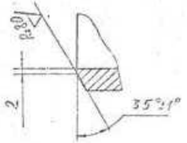

Rz 80 (√)

TECHNICAL CONDITIONS

1. Substitute for material - АЛ2 ГОСТ 2685-75.
2. Unspecified casting radii - 3 mm, maximum.
3. Casting drafts - 2°, maximum, in excess of tolerance.
4. Unspecified wall thickness - $(2^{+1.0}_{-0.5})$ mm
5. Pusher traces not in excess of 0.5 mm deep on surface B are tolerable.
6. Other requirements to casting - according to ТТАЛ-370.
7. Unspecified limit deviations of sizes - ±0.5 mm.
8. Sizes in brackets - after assembly.
9. Manufacturing pattern not in excess of 0.3 mm deep at pitch of 1 x 1 mm and pattern not in excess of 0.3 mm high and at pitch of 5 x 5 mm on surface Д are tolerable.

(1) View E
(2) Scale 2:1
(3) Two holes

APPROVED		765-71-1752	
CHECKED	P.K.SETH	WALL	WEIGHT 0.155 / SCALE 1:1
			SHT / SHTS
		MATL. АЛ9 GOST 2685-75	

Format: 22

765-71-1752

EXPLANATORY NOTES TO TECH CONDITIONS

(I) WALL SHOULD BE MANUFACTURED FROM PRESSURE DIE CASTING ALUMINIUM ALLOY OF GRADE АЛ2 OR АЛ9 OF GOST 2685-75. THE CHEMICAL COMPOSITIONS ARE GIVEN BELOW.

GRADE OF ALLOYS	CHEMICAL COMPOSITIONS %		
	ALUMINIUM	MAGNESIUM	SILICON
АЛ2	BASE	—	10.0 – 13.0
АЛ9	BASE	0.2 – 0.4	6.0 – 8.0

ADMIXTURE

ADMIXTURE COMPONENTS	GRADE	
	АЛ2	АЛ9
IRON	1.50	1.50
MAGNESIUM	0.10	—
MANGANESE	0.50	0.50
COPPER	0.60	0.20
ZINC	0.30	0.30
TIN	—	0.01
LEAD	—	0.05
TITANIUM	0.10	—
BERILIUM	—	0.10
ZIRCONIUM	0.10	0.15
TOTAL	2.70	2.00

(II) MECHANICAL PROPERTIES

GRADE	PARTIAL RESISTANCE	SPECIFIC ELONGATION	HARDNESS BRINALL
АЛ2	16 kg/mm² (Max)	1 % (Max)	50 (Max)
АЛ9	17 kg/mm² (Max)	1 % (Max)	50 (Max)

(III) SYMBOL

⏥ 0.3 FLATNESS OF THE INDICATED SURFACE TO BE WITH IN 0.3 mm

(IV) SURFACE FINISH

Rz 80 (√) REPRESENTS SURFACE FINISH TO BE OBTAINED WITHOUT REMOVAL OF MATERIAL IN RZ VALUE 80 μ Max; ON THOSE SURFACES WHERE SURFACE FINISH IS NOT SPECIFIED.

Rz 80 REPRESENTS SURFACE FINISH TO BE OBTAINED BY MACHINING IN RZ VALUE 80 μ MAXIMUM.

					INSCRIBED		DRG NOT TO BE SCALED	PERTAINS TO
					CHECKED		ALL SHARP EDGES & CORNERS TO BE ROUNDED OFF	
					APPROVED		ALL DIMENSIONS ARE IN mm UNLESS OTHERWISE SPECIFIED	765-71-1752
					DATE		WALL	
DC(I)	DATE	ZONE	BRIEF RECORD	SIGN	TOLERANCE UNLESS OTHERWISE SPECIFIED GEN / DEC / ANG		SCALE:-- —	
							CONTROLLERATE OF INSPECTION FIRE FIGHTING EQPT PUNE	

1-3-41

easy2Convert www.easy2convert.com

765-71-1752

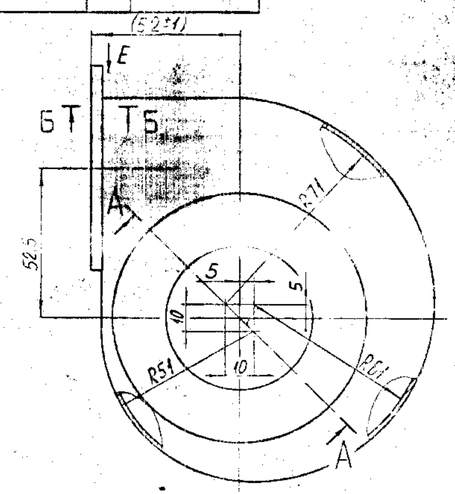

А-А

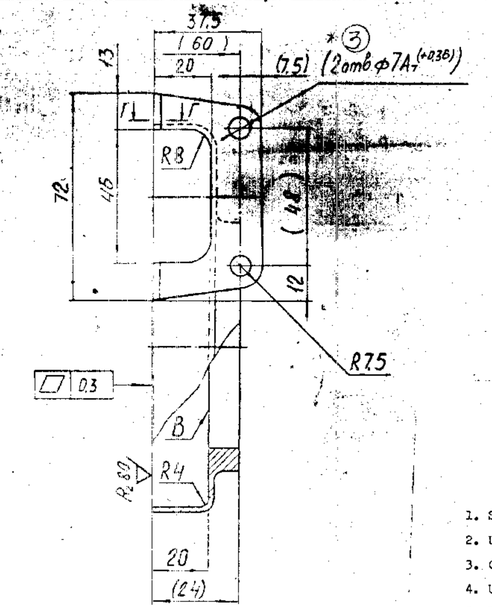

Б-Б

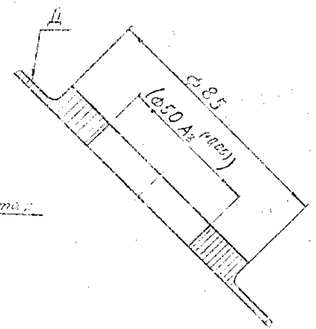

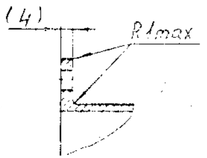

① Вид Е

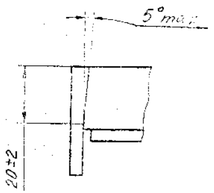

② Г-Г
М2:1

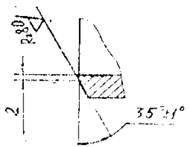

* ① View E
* ② Scale 2:1
* ③ Two holes

Rz 80 (√)

TECHNICAL CONDITIONS

1. Substitute for material - АЛ2 ГОСТ 2685-75.
2. Unspecified casting radii - 3 mm, maximum.
3. Casting drafts - 2°, maximum, in excess of tolerance.
4. Unspecified wall thickness - $(2^{+1.0}_{-0.5})$ mm
5. Pusher traces not in excess of 0.5 mm deep on surface B are tolerable.
6. Other requirements to casting - according to ТТАЛ-370.
7. Unspecified limit deviations of sizes - ±0.5 mm.
8. Sizes in brackets - after assembly.
9. Manufacturing pattern not in excess of 0.3 mm deep at pitch of 1 x 1 mm and pattern not in excess of 0.3 mm high and at pitch of 5 x 5 mm on surface Д are tolerable.

APPROVED		765-71-1752		
CHECKED	P.K.SETH			
CONTROLLERATE OF INSPECTION (ICV)		WALL	WEIGHT 0.155	SCALE 1:1
			SHT	SHTS
		MATL. АЛ9 GOST 2685-75		

256

765-71-1753

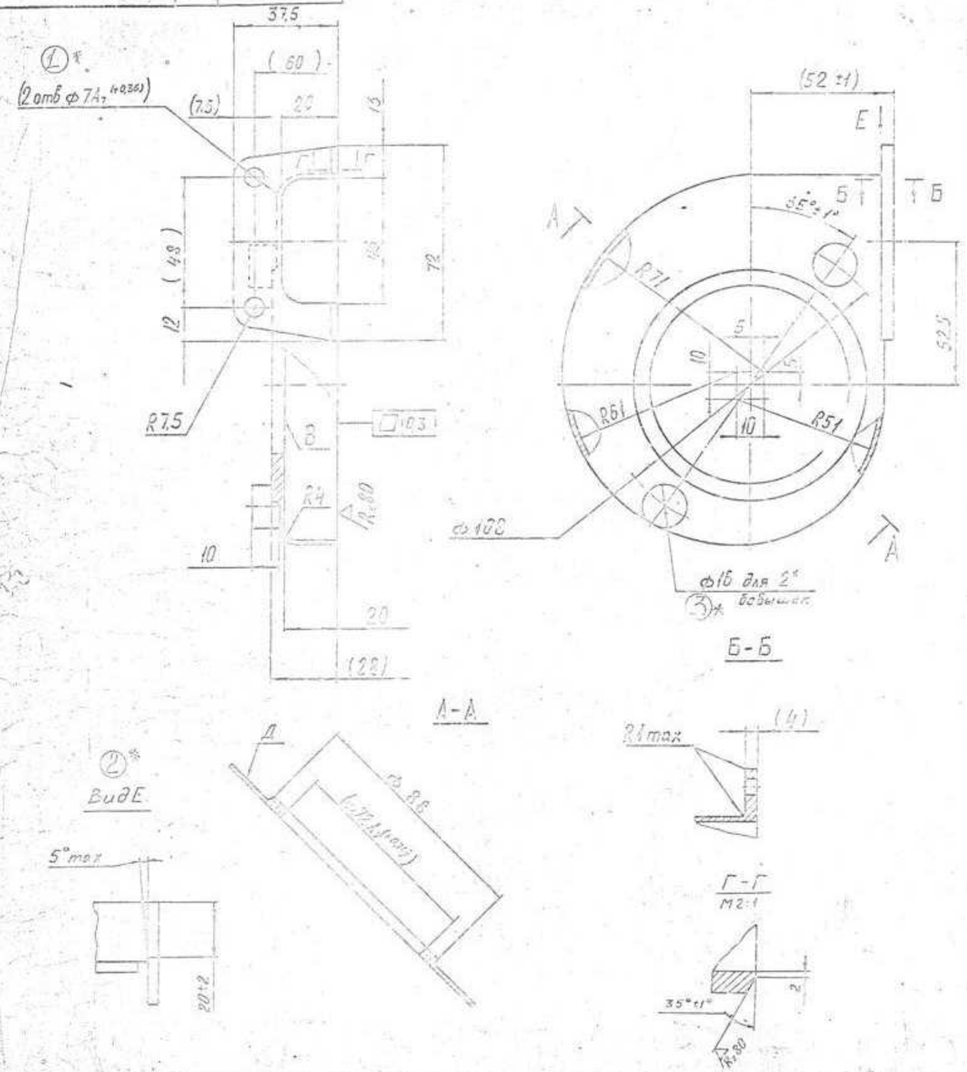

(1)* Two holes
(2)* View E
(3)* For two bosses

TECHNICAL CONDITIONS

1. Substitute for material - АЛ2 ГОСТ 2685-75.
2. Unspecified casting radii - 3 mm, maximum.
3. Casting drafts - 2°, maximum, in excess of tolerance.
4. Unspecified wall thickness - $(2^{+1.0}_{-0.5})$ mm.
5. Pusher traces not in excess of 0.5 mm deep on surface B are tolerable.
6. Other requirements - according to ТТАЛ-370.
7. Unspecified limit deviations of sizes - ±0.5 mm.
8. Sizes in brackets - after assembly.
9. Manufacturing pattern not in excess of 0.3 mm deep at pitch of 1 x 1 mm on surface B and pattern not in excess of 0.3 mm high at pitch of 5 x 5 mm on surface Д are tolerable.

APPROVED		765-71-1753	
CHECKED		WALL	WEIGHT 0.107 / SCALE 1:1
		АЛ9 GOST 2685-75	SHT / SHTS

765-71-1753

EXPLANATORY NOTES TO TECHNICAL CONDITIONS

(I) WALL SHOULD BE MANUFACTURED FROM PRESSURE DIE CASTING ALUMINIUM ALLOYS OF GRADE AL2 OR AL9 OF GOST 2685-75. THE CHEMICAL COMPOSITIONS ARE GIVEN BELOW

GRADE OF ALLOYS	CHEMICAL COMPOSITIONS %		
	ALUMINIUM	MAGNESIUM	SILICON
AL2	BASE	—	10.0 - 13.0
AL9	BASE	0.2 - 0.4	6.0 - 8.0

(II) ADMIXTURES

ADMIXTURE COMPONENTS %	GRADES MAXIMUM		ADMIXTURE COMPONENTS %	GRADES MAXIMUM	
	AL2	AL9		AL2	AL9
IRON	1.50	1.50	LEAD	—	0.05
MAGNESIUM	0.10	—	TITANIUM	0.10	—
MANGANESE	0.50	0.50	BERILIUM	—	0.10
COPPER	0.60	0.20	ZIRCONIUM	0.10	0.15
ZINC	0.30	0.30	TOTAL	2.70	2.00
TIN	—	0.01			

(III) MECHANICAL PROPERTIES

GRADE OF ALLOYS	PARTIAL RESISTANCE	SPECIFIC ELONGATION	HARDNESS
AL2	16 kg/mm² (max)	1 % (max)	50 BHN(max)
AL9	17 kg/mm² (max)	1 % (max)	50 BHN(max)

(IV) SYMBOL

□ 0.3 FLATNESS OF THE INDICATED SURFACE TO BE WITHIN 0.3 mm

(V) SURFACE FINISH

Rz 80 REPRESENTS SURFACE FINISH TO BE OBTAINED BY ANY MACHINING IN Rz VALUE 80 μ max.

Rz 80 (V) REPRESENTS SURFACE FINISH TO BE OBTAINED WITHOUT REMOVEL OF MATERIAL IN Rz VALUE 80 μ max. ON THOSE SURFACES WHERE SURFACE FINISH IS NOT SPECIFIED.

DC(I)	DATE	ZONE	BRIEF RECORD	SIGN

INSCRIBED	DRG NOT TO BE SCALED	PERTAINS TO
CHECKED	ALL SHARP EDGES & CORNERS TO BE ROUNDED OFF.	
APPROVED	ALL DIMENSIONS ARE IN mm UNLESS OTHERWISE SPECIFIED	765-71-1753
DATE	WALL	
TOLERANCE UNLESS OTHERWISE SPECIFIED GEN ± DEC ± ANG	SCALE:- —	

CONTROLLERATE OF INSPECTION FIRE FIGHTING EQPT. PUNE

EasyZConvert www.easyzconvert.com

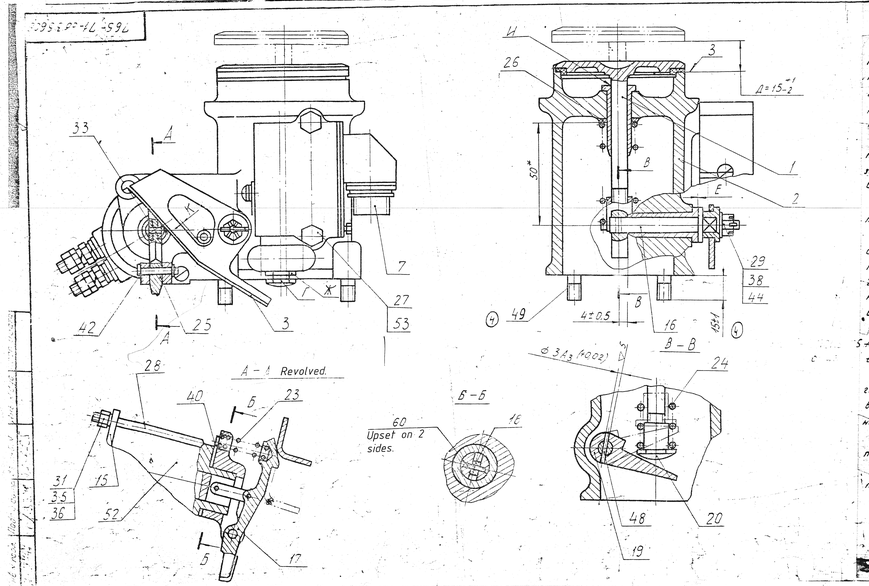

1). * Dimension is given for reference.

2). With dimension A set along the contour of the valve, Ref.No.1, fit the lever, Ref.No.19 onto the shaft so that the lever Ref.No.3 is locked by the retainer as it is shown conventionally in section A-A, there upon drill the lever fitted onto the shaft and secure it with lock pins, while axial play E of the shaft should not exceed 0.5 mm.

3). In closed condition, the valve should tightly fit to the box along the entire perimeter, in this case distance K for motion of the lever, Ref.No.3, should be atleast 0.5mm.

4). Crimp the free end of the rivet Ref.No.33, so that the clamp, Ref.No.18, is able to turn easily.

5). In finally assembled unit the retainer should reliably keep the valve in the open position and under the relay action, at a voltage of 22-0.5 V, it should positively release the valve engagement lever, Ref.No.3, with the armature thrusting against the relay body, no more than 3 washers, Ref.No.40, may be placed.

6). Lubricate all friction surfaces of the parts with lubricant lithol-24, GOST 21150-75, and wipe out the excessive lubricant from surface И.

7). Check the inner space of box for tightness by pouring water upto the box full capacity for 3 mints. Leakage of water along the valve sealing is not allowed.

Grinding of valve gasket and of surface 3, leakage along the shaft, ref.no.16, are allowed. After checking the box for tightness, dry the inner space of box for compressed air.

8). Adjust the limit switch by screw Г and locknut Ж, so that when locking the lever, Ref.No.3, by the retainer, the switch rod is pressed by the lever, contacts 3 and 4 are closed, contacts 1 and 2 are opened, the switch rod free travel should be 2 to 3 mm. When the valve is closed the rod should be lowered, contacts 1 and 2 closed contacts 3 and 4 opened.

9). Check reliable locking of the valve, Ref.No.1, in the opened position by applying a static load of 5kg. acting along the axis of valve. Releasing of the lever Ref.No.3, from the retainer, Ref.No.17, is not allowed.

10). If necessary, the lever Ref.No.3, may be straightened

11). Before assembling lubricate the threaded joints with a thin layer of lubricant lithol-24, GOST21150-75. or lubricant MC-70, GOST 9762-76, secure the pusher Ref.No.20, and studs, Ref.No.49, with the aid of iron minium, GOST 8866-76.

12). To provide for locking of the nut, Ref.No.29, with the cotter pin, Ref.No.44, no more than 2 washers, Ref.No.38, may be placed.

13). Under cut of the rivet Ref.No.33, not exceeding 2mm is allowed.

7	-	766.599-80			
6	-	765224-79			
5	-	765.424-78			
4	-	765.187-78			
3	-	765.450-77			

ENGG-1	DOC ND	SIGN	DATE
DRAWN	BHOSHAN		2.8.86
EDT & CHKD	A.K.KULKARNI		4.8.86
F/M, D.C.	S.B.HANDE		6.8.86
DIV OF R	T.K.BANERJEE		8.8.86
	NAME	SIGN	DATE

B - 765222-80 Auth. 75%

765-71cd 3560B

BOX
(Assembly drawing)

SHEET	WEIGHT	SCALE
1	1.66	1:1
TOTAL SHEETS		

765-71cd3560B

EXPLANATORY NOTES TO TECH. CONDITIONS.

I) REFER NOTE No. 6 AND 11

a) LUBRICANT LITHOL 24 (GOST 21150-75)

LITHOL 24 GREASE IS MADE BY THICKENING MINERAL OIL WITH LITHIUM SOAPS OF 12-OXYSTEARIC ACID AND ADDING AN ANTIOXIDISING OR A VISCOUS DOPE.

b) LUBRICANT MC-70 (GOST 9762-76)

GREASE MC-70 IS MANUFACTURED BY THICKENING MBTI (MVP) GRADE INSTRUMENT OIL WITH BARIUM AND ALUMINIUM STEARIC ACID SOAP AND ADDING GRADE 80 CERESINE AND POLYISOBUTYLENE OF GRADES P-200 N, P-200 P-155N AND P-155.

REFER NOTE No. 11

IRON MINIMUM

IRON MINIMUM IS A SUSPENSION OF PIGMENT (IRON OXIDE) GROUND WITH DRYING OIL WITH OR WITHOUT ADDITIVES.

II) PILOT SAMPLE

THREE SAMPLES SHALL BE SUBMITTED TO CQAFE, PUNE FOR THEIR TEST AND APPROVAL BEFORE THE COMMENCEMENT OF BULK SUPPLY.

					DRN	—sd—	DRG NOT TO BE SCALED.	PERTAINS TO
					TCD	—	ALL SHARP EDGES & CORNERS TO BE ROUNDED OFF.	
					CHD	—sd—		
						—sd—	ALL DIMENSIONS ARE IN mm. UNLESS OTHERWISE SPECIFIED	
					PSD	—		
					APPD	—sd—		
			EXPLANATORY NOTES RETRACED.		DATE	13 OCT '86	BOX (ASSY. DRG)	765-71cd3560B
					TOLERANCE UNLESS OTHERWISE SPECIFIED.			
DC(L)	DATE	ZONE	BRIEF RECORD	SIGN	GEN	DEC	ANG.	SCALE:-
								CQA (FE), AUNDH CAMP, PUNE-27.

JOB No.	AUTHENTICATION	TCD	CHD	PSD	DATE	DRG RAISED ON	W/O No.	

1-1-A8

ITEM	ZONE	REQD	DESIGNATION	DESCRIPTION	QTY	REMARKS
				Technical papers.		
14			765-71-сб356сб	Assembly drawing.		
				Assembly units.		
11		1	765-71-сб357	Valve	1	
12		2	765-71-сб358	Body.	1	
11		3	765-71-сб359	Lever.	1	
13		7	765-96-сб166	Limit switch		
			or	(Spring-return switch)	1	
13			765-96-сб178-01			

765-71-сб356,

S.NO	SHT	DOC.NO.	SIGN	DATE
DRAWN		BHUSHAN		22.8.84
CD'&CH		[illegible]	[illegible]	[illegible]
C/MUC		S.P. NAIR	[illegible]	[illegible]
APPR	VGM	K. BANERJEE	[illegible]	[illegible]
		NAME	SIGN	DATE

BOX.

SHT. NO. 1 | 6

FACTORY

FORM	ZONE	REF NO	DESIGNATION	DESCRIPTION	QTY	REMARKS
				Parts.		
11		15	765-71-364	Flange	1	
12		16	765-71-810	Shaft	1	
13		17	765-71-812	Retainer	1	
11		18	765-71-813	Clamp	2	
12		19	765-71-814	Lever	1	
11		20	765-71-815	Pusher	1	
		21				
11		23	700-38-1123	Spring	1	
11		24	700-38-1577	Spring	1	
11		26	700-40-73	Gasket.	1	
12		25	672-47-5-01	Axle	1	
12		53	672-31-71	Tab washer	2	

765-71-cδ356.

S.NO	SHT	DOC.NO.	SIGN	DATE
DRAWN		BHUSHAN		22.8.84
EDT&CHK		A.U.DUBEY		28-8-84
F/M.D.C.		S.R.NAIR		28.8.84
APPROVED		T.K.BANERJEE		31.8.84
		NAME	SIGN	DAT

BOX.

CIFE PUNE

SHT. NO	TOTAL SHT.
2	6

ZONE	REF No	DESIGNATION	DESCRIPTION	QTY	REMARKS
			Standard Items.		
	27		Bolt M6x40.46.019		
			GOST 7795-70	2	
	28		Screw M4.8h 6hx70.66.		
			016 GOST 1491-72	2	
	29.		Nut M5.6.016		
			GOST 5932-73	1	
	31		Nut M4.6.016		
			GOST 5927-70	2	
	33		Rivet 2x10.32		
			GOST 10299-80	1	
	35		Washer 4T65Г 05		
			GOST 6402-70.	2	

765-71-cб356

S.NO	SHT	DOC.NO	SIGN	DATE
DRAWN		BHUSHAN		22.8.8
EDT&CHK		A. MOUSLEY		24.8.8
F/M.D.C.		S.R. NAIR		26.8.8
APPROVED		T. K. BANERJEE		31.8.8
		NAME	SIGN	DATE

BOX.

SHT. NO	SHEET TOT
3	6

ZONE	REF. NO.	DESIGNATION	DESCRIPTION	QTY	REMARKS
	36		Washer 4.01.019 or 4.02.019 GOST 11371-78	2	
	38		Washer 5.01.019 or 5.02.019 GOST 11371-78	2	Max,Qty.
	40		Washer 24x1,5.35 GOST 11371-78	3	Max,Qty.
	42		Cotter pin 1x12.019 GOST 397-79	1	
	44		Cotter pin 16x10..019 GOST 397-79	1	
	48		Lock-pin Зпр22а x12 OST 3-2234-80	1	HB255...207 ø3,8 to 4,2
	49		Stud M6 $\frac{52}{20}$ x16.66.019 GOST 22036-76 or 29363	4	Without dividing in to groups

765-71-c0356.

S.NO	SHT	DOC.NO	SIGN	DATE
DRAWN		BHUSHAN		22.8.84
FDT CHK		[illegible]	[illegible]	26.8.84
F/M.D.C		S.R.NAIR	[illegible]	26.8.84
APPROVED		K.BANERJEE	[illegible]	31.8.84
		NAME	SIGN	DATE

BOX

SHT NO.	TOTAL SHTS
4	6

ZONE	REF NO	DESIGNATION	DESCRIPTION	QTY	REMARKS
			Other Items.		
	52		Relay PM6-1C		
			PM6-1C 000TY	1	
			Materials.		
	60		Wire K02		
			GOST 792-67, l=15	1	

765-71-cδ356,

S.NO	SHT	DOC.NO.	SIGN	DATE
DRAWN		BHUSHAN.		22.8.8
FDT&CHK		[illegible]	[illegible]	[illegible]
F/M.D.C.		S.R.NAIR	[illegible]	[illegible]
APPROVED		T.K.BANERJEE	[illegible]	[illegible]
		NAME	SIGN	DATE

BOX.

SHT. NO	NO OF SHT.
5	6

FORMAT	ZONE	REF NO	DESIGNATION	DESCRIPTION	QTY	REMARKS

S.NO	SHT	DOC.NO.	SIGN	DATE
DRAWN		BHUSHAN		22.6.84
EDT&CHK				
F/M.D.C.		S.R.NAIR		
APPROVED				
		NAME	SIGN	DATE

765-71-c0356

BOX

SHT. NO	SHEET NO
6	6