20-05-126-4

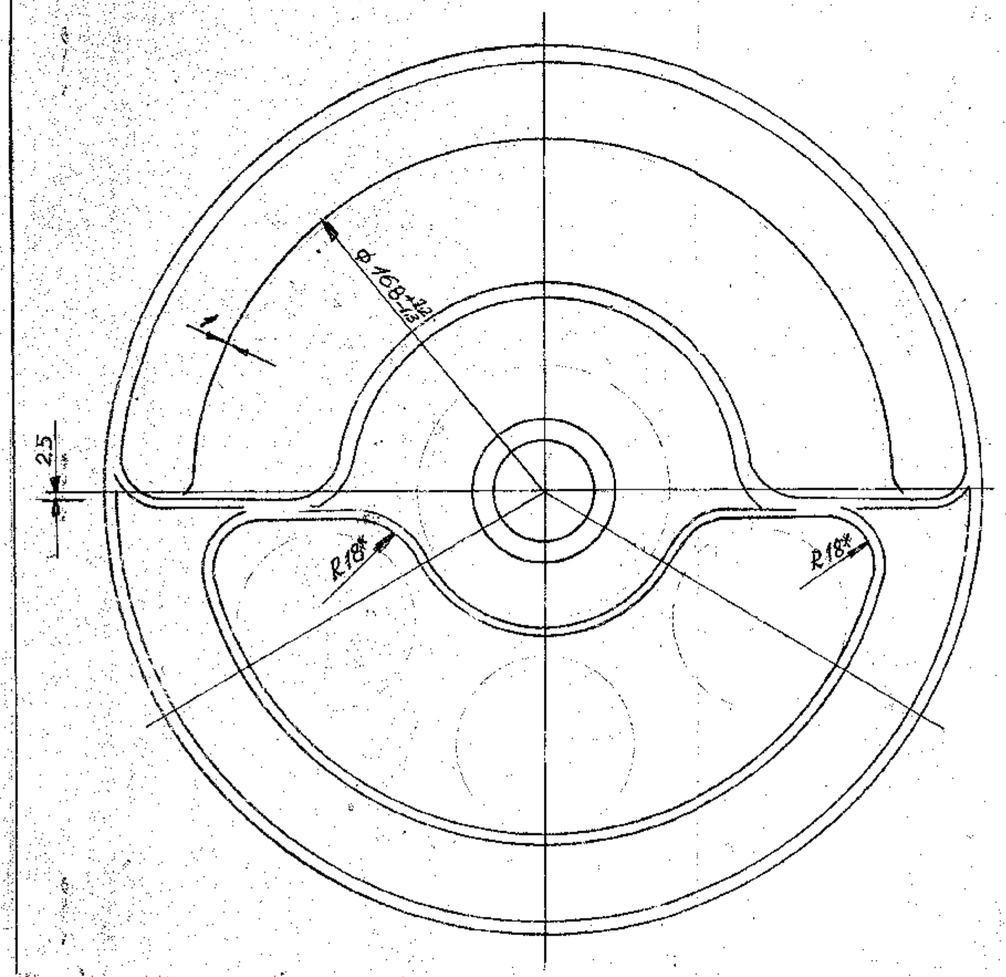

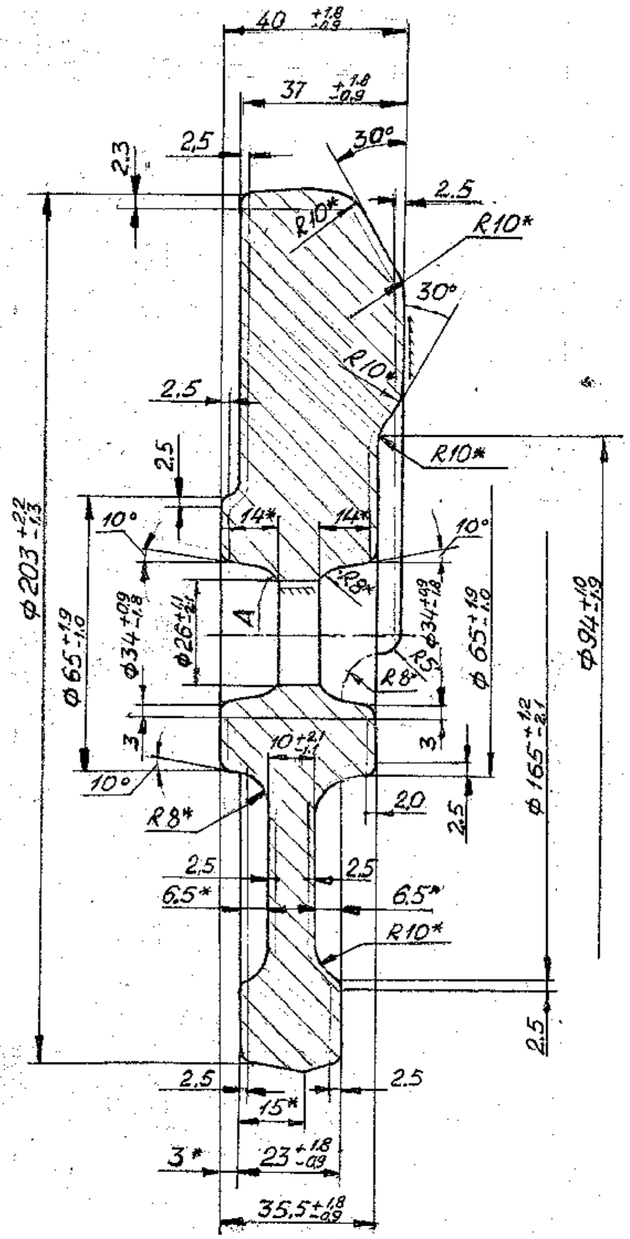

1. STEEL GROUP M 2 AS PER GOST 7505-74.
2. FORGING COMPLEXITY GRADE C2 AS PER GOST 7505-74.
3. MANUFACTURING ACCURACY CLASS II AS PER GOST 7505-74.
4. HOT STAMPING.
5. ~~NORMALISING AND TEMPERING BHN 197 - 269 (DIA OF INDENTATION 3.4 - 4.3 M.M)~~ (1)
6. * DIMENSIONS TO BE ENSURED BY TOOL.
7. UNSPECIFIED DRAFTS 3°...7°.
8. UNSPECIFIED ROUNDING OFF RADII R 2.5 M.M.
9. UNFILLING OF CORNERS SHOULD NOT EXCEED 0.5 OF ACTUAL ALLOWANCE.
10. NON-FLATNESS MAXIMUM 1.0 M.M.
11. MISALIGNMENT OF $\phi\ 26^{+1.1}_{-2.1}$ IN RELATION TO $\phi\ 203^{+2.2}_{-1.3}$ IS MAXIMUM 2.0 M.M.
12. MISMATCH OF PARTING LINE SHOULD NOT EXCEED 0.9 M.M.
13. FLASH ALONG PARTING LINE MAXIMUM 1.2 M.M, FOLDING OF FLASH "A" IS NOT LIMITED.
14. ON SURFACES SCALE DEPRESSIONS AND OTHER SURFACE DEFECTS TO A DEPTH OF MAXIMUM 0.5 OF ACTUAL ALLOWANCE IS ALLOWED.
15. ON SURFACES SHRINKAGE, HAIR LINE CRACKS AND OTHER SURFACE DEFECTS (EXCEPT CRACK) TO A DEPTH NOT EXCEEDING 0.5 OF ACTURL ALLOWANCE IS ALLOWED, DEFECT DEPTH IS TO BE DETERMINED BY MACHINING 0.5% FROM A BATCH.
16. DRESS THE SCALES.
17. INSPECTION GROUP III AS PER GOST 8479-80.
18. REST OF THE TECHNICAL REQUIREMENT AS PER GOST 8479-70 AND GOST 7505-74.

(1) 5 FORGINGS TO BE SUPPLIED NORMALIZED AT 940°C+20°C, HIGH TEMPERED 640°C+20°C, HARDNESS 269-197 BHN.

ISSUE	DATE	REFERENCE
(1)	4.1.91	Jt GM's letter dated 13-12-90
APPROVED	K.R.S.	
CHECKED (TRANSLATION)		
DRAWN	P.R.K.RAO	

20-05-126-4

GEAR

(FORGING)

18X2H4MA (18X2H4BA)

TY 14-1-381-72

LETTERS	MASS	SCALE
	7.8	1:1

SHEET 1 SHEETS 1

ENGINE FACTORY AVADI