Rz20

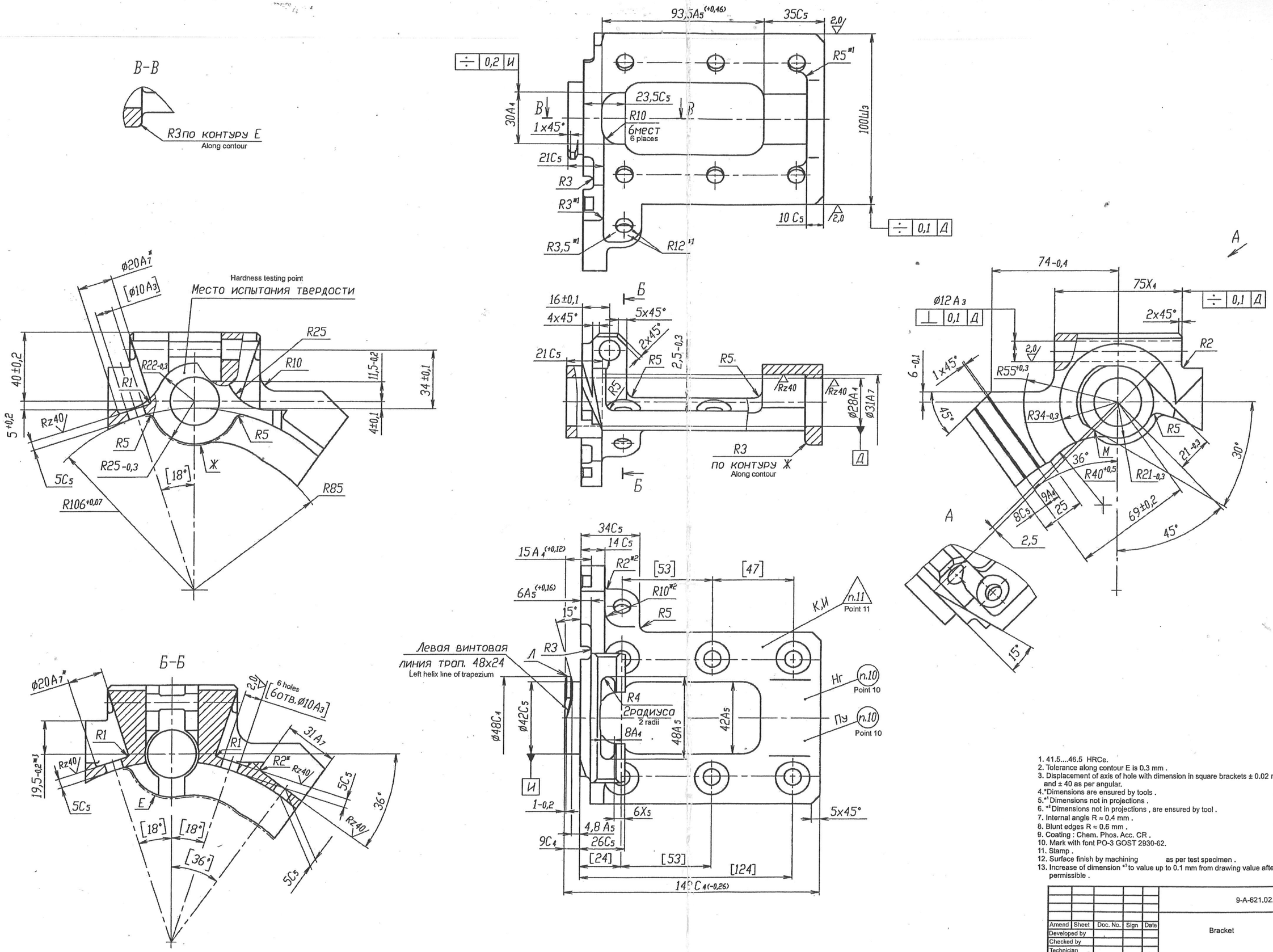

1. 41.5...46.5 HRCe.
2. Tolerance along contour E is 0.3 mm .
3. Displacement of axis of hole with dimension in square brackets ± 0.02 mm along linear dimension and ± 40 as per angular.
4. *Dimensions are ensured by tools .
5. *1 Dimensions not in projections .
6. *2 Dimensions not in projections , are ensured by tool .
7. Internal angle R ≈ 0.4 mm .
8. Blunt edges R ≈ 0.6 mm .
9. Coating : Chem. Phos. Acc. CR .
10. Mark with font PO-3 GOST 2930-62.
11. Stamp .
12. Surface finish by machining as per test specimen .
13. Increase of dimension *2 to value up to 0.1 mm from drawing value after heat treatment is permissible .

						9-A-621.02.002			
Amend	Sheet	Doc. No.	Sign	Date	Bracket	Type	Weight	Scale	
Developed by						O1	1.15	1:1	
Checked by									
Technician						Sheet	Sheets 1		
Head of bureau									
Head of Q.C.D					Steel 30KhRA OST 3-98-80				
Approved by									

Format A1

First remarks | Refer No. | Sign & Date | Duplicate Inv. No. | Alternate Inv. No. | Sign & Date | Inv. No.