✝ DRG.NO. RFI SK NO. 9521

MANUFACTURING OF FORGING UNDER DISCRETION OF MANUFACTURER.

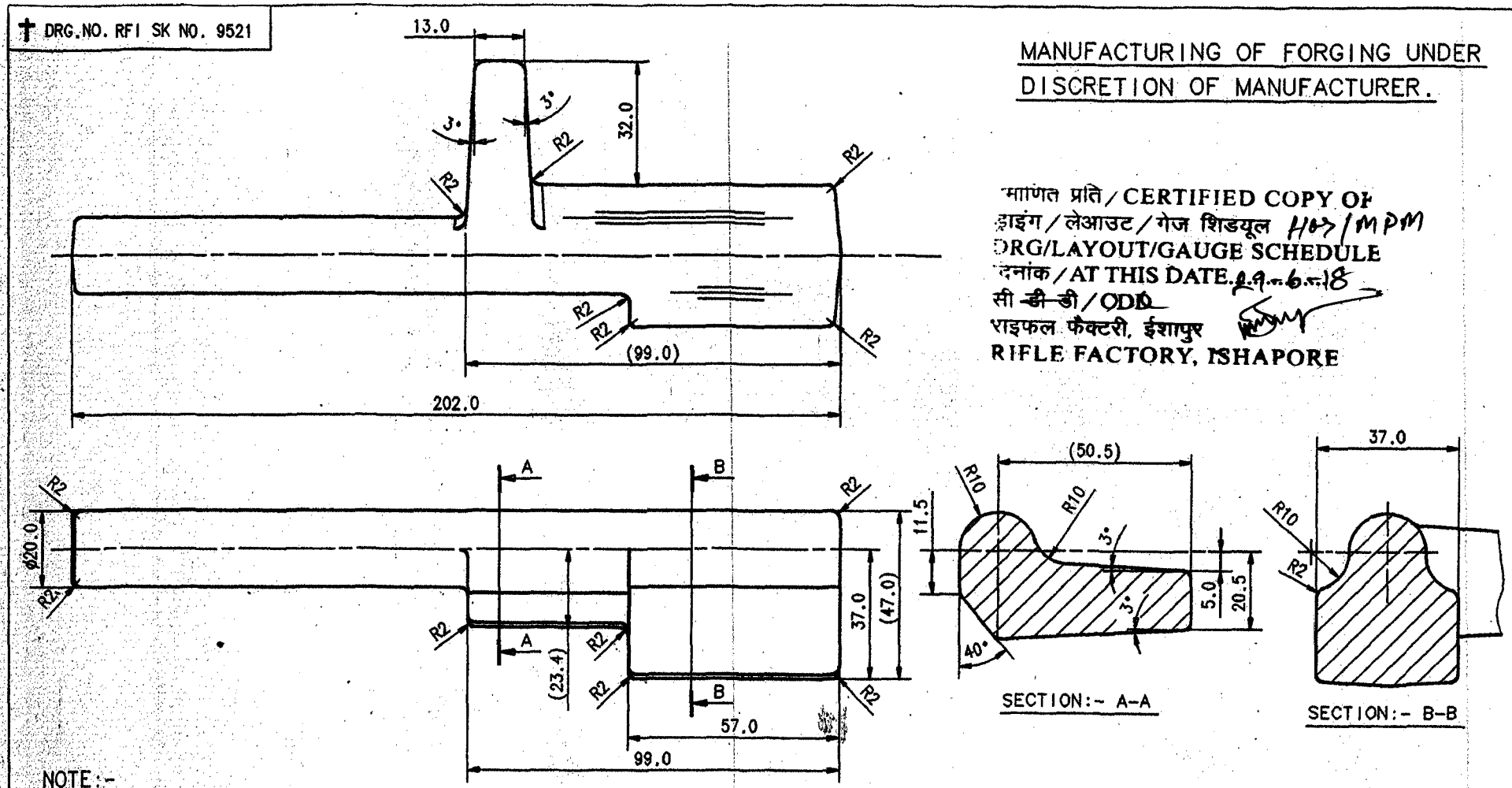


प्रमाणित प्रति / CERTIFIED COPY OF
ड्राइंग / लेआउट / गेज शिडयूल HOS/MPM
DRG/LAYOUT/GAUGE SCHEDULE
दिनांक / AT THIS DATE 29-6-18
सी ~~डी डी~~ / ODD
राइफल फैक्टरी, ईशापुर
RIFLE FACTORY, ISHAPORE

NOTE:-

1. TOLERENCE UNLESS OTHERWISE SPECIFIED ±0.5
2. MISMATCH SHOULD NOT EXCEED 0.5mm.
3. CORNER RADIUS UNLESS OTHERWISE SPECIFIED R3
4. FORGING SURFACES SHOULD BE FREE FROM PIT MARKS AAND SCALES.
5. DRAFT ANGLE UNLESS OTHERWISE SPECIFIED 5°
6. BEND IS NOT ALLOWED ALONG HORIZONTAL AXIS OF THE FORGING.
7. CAAST NO./SYMBOL LETTERS TO BE STAMPED ON INDIVIDUAL FORGING.
8. FORGIMG TO BE SUPPIED IN ANNEALED CONDITION ALONG WITH THE TEST SAMPLE TO BE TESTED FOR HARDNESS IN ANEALED CONDITION AND AFTER FINAL HEAT TREATMENT.
9. MAGNETIC TEST FOR CRACK DETECTION TO BE CARRIED OUT.

SEEN & APPROVED
HOS/CNC-II

| | | | | |
|---|---|---|---|---|
| MATERIAL:- STEEL BS:970 PT 1 1983 GD.655 M13 | | ALL DIMENSIONS ARE IN MILI METER<br>IMPORTENT DIMENSIONS MARKED THUS ◆<br>INFORMETION MARKED THUS ✝ TO BE MARKED ON | | |
| TITLE OF | OPERATION | 2016 | NAME | DATE |
| FORGING OF PISTON EXTN. | | DGN. | | |
| | | DRN. | Munita | 29/9/16 |
| ORDNANCE FACTORY BOARD<br>RIFLE FACTORY<br>ISHAPORE | SCALE:- 1:1 | CKD. | | |
| | | APPD. | | |
| ASSAULT RIFLE 7.62x39mm. (GHAATAK)<br>PISTON EXTENSION | | DRG.NO.<br>RFI SK NO. 9521 | | |
| | | SHEET-1 | OF-1 | |