DS.CAT. NO. 5315-009113	FOR EXPLANATION SEE D.D.NOTE SHEET NO.3 THIRD ANGLE PROJECTION. DIMENSIONS ARE IN MILLIMETRES

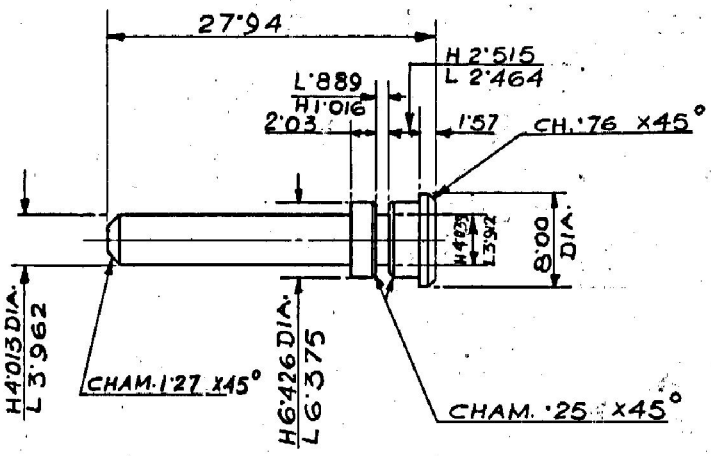

NOTE :-
WHERE TOLERANCES ARE NOT SHOWN DIMENSIONS IN THE WHOLE NUMBER OR WITH ONE DECIMAL PLACE ± 1·27 mm. DIMENSIONS WITH TWO DECIMAL PLACES ± ·13 mm.

HARDNESS :-
400-450 HV (56-59 HRD)

FINISH :-
PHOSPHATE TO SPECN. WPN/GEN 3
CLASS I OIL FINISH.

METRIC
5315-009113

DATE	AUTHY	ZONE	NATURE	SIG.
05-7-2001	25060-SA		DS.CAT. NO. 5315-009113 WAS 1005-001662.	DAC
26.4.83	17540-SA		MATL. AMENDED	SSO
15.2.77	15036-SA		DRG. SEALED	DSS

AMENDMENTS

SEALED :- D.C.(1) 15036-SA DT. 15.2.77
MATERIAL :- STEEL B.S.1429:1980, 070A72 NS
PROTECTIVE FINISH :- AS STATED.
ESTIMATED WEIGHT :-
SCALE :-

PIN, AXIS TRIGGER & SEAR.

ASSY.DRG. :- 1005-001594, 1005-001595 & 1005-001596
INSP. INSTRS :-

DRAWN	CHECKED	TRACED	TRN.CHD.
		[signature]	[signature]

APPROVED [signature] MAJ. FOR CISA.
DATE :- 19·6·67 [signature] I/C, D.O.
DESIGNER'S REF. ARDE. 657/57
DS.CAT. NO. 5315-009113
CISA. ICHAPUR

Create PDF files without this message by purchasing novaPDF printer (http://www.novapdf.com)