DRG No.	IC	SS	S	AA	A	C	SST
	0 2 0 4	0 3	0 2	0 0	0 2	0 0 1	0 0 D B

GENERAL TOL. : FINE / MEDIUM / COARSE
CLASS TO IS: 2102

DRG. CONVENTIONS CONFIRM TO INDAN STANDARDS
DIMENSIONS ARE IN mm UNLESS OTHERWISE STATED.

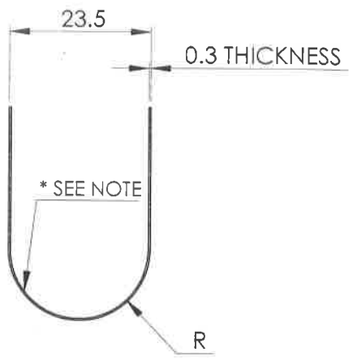

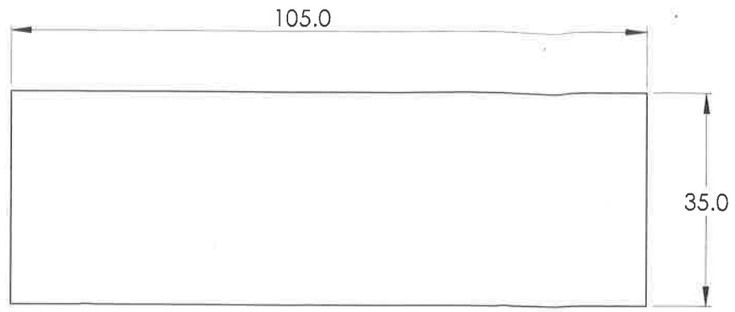

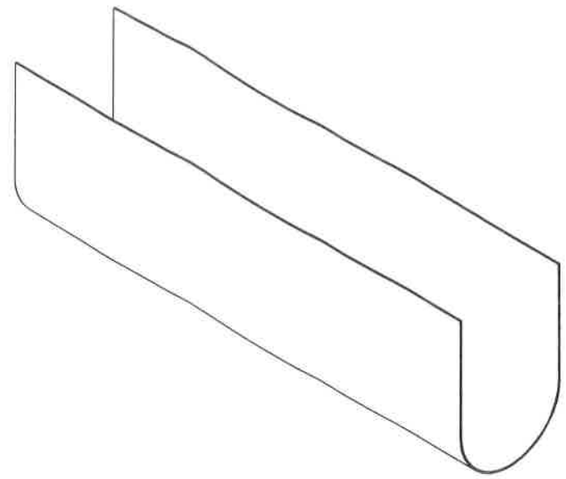

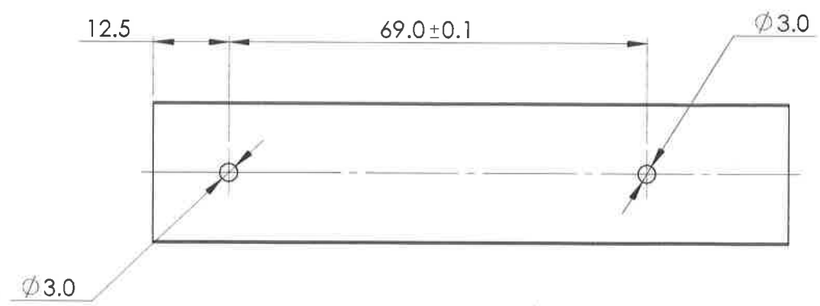

NOTES:-

1) REMOVE ALL SHARP EDGES AND BURRS.
2) SURFACE FINISH N8 ON SIDE MARKED *.
3) ALT MATERIAL : STEEL BS:1449 Pt.2:1983,
   STEEL 304S11, 15, 16, 31 or 316 S11, 13, 31, 33 Strip,
   SURFACE FINISH NO.8 ON ONE SIDE

Sr. No.	DATE	AUTHORITY	BRIEF RECORD	ZONE	CD	GO
1	22/11/2017	M-40	NOTE 3 ALT. MATERIAL ADDED DIMENSION 69.0 ±0.1 WAS 69.0	F-1,2		

SIGN

DRN: PRANAV
SIGN:
DATE: 16/08/2016
CHECKED

MATERIAL:
STEEL TO IS: 6911-1992, Gd X20Cr25Ni20

APPD.
DATE: 22/11/2017
FOR DIRECTOR

PROTECTIVE FINISH:

SEALED
DATE:

SHEET SIZE: A3
SCALE: 1:1

EST. MASS

TITLE:

REFLECTOR

DESIGN AUTHORITY
ARDE
PUNE 411021

DRG No.	IC	SS	S	AA	A	C	SST
	0 2 0 4	0 3	0 2	0 0	0 2	0 0 1	0 0 D B

PART No. | DS CAT No. | AHSP