USED ON	ITEM	DRAWING NUMBER	D S CAT NUMBER	DESCRIPTION	No. OFF	REMARKS
		C6 3338-403-2		COVER OF SUPER-		
		AND ITEM LIST		CHARGER ASSY		
	1	C6 3338-428		COVER BUSHIHG	2	
		& ITEM LIST				
	4	3338-170		SETTING BUSH	2	
	5	3338-421-1		COVER OF SUPER CHARGER	1	A2 X 4 TROPICAL (TH) MAKE
	6	3338-466		BEARING	1	
	8	3338-474		HOLDER	1	A4 X 3
	11	350-05		STUD M6 X 35	2	
	12	350-16 A		STUD M6 X 32	5	
	13	351-06		NUT	5	
	14	352-26		PIN 6h8 X 14	1	
	15	353-11		LOCK WASHER 7	5	
	16	356-57		LOCK WOOD SCREW	4	

ISSUE	DATE	NATURE OF AMENDMENTS	ISSUE	DATE	NATURE OF AMENDMENTS
A	8 5-96	AUTHY NOTN No BK 87-126			

DRN	Alu	CONTROLLERATE OF QUALITY ASSURANCE (HEAVY VEHICLES) AVADI
CHD	[illegible]	TITLE: COVER OF SUPER-CHARGER ASSY
TCD	[illegible]	
APPD	[illegible]	
DATE	28-4-95	SHT No 1 OF 1 — D S CAT NUMBER — ITEM LIST FOR C6 3338-403-2

DRAWING NUMBER
C63338-404-7

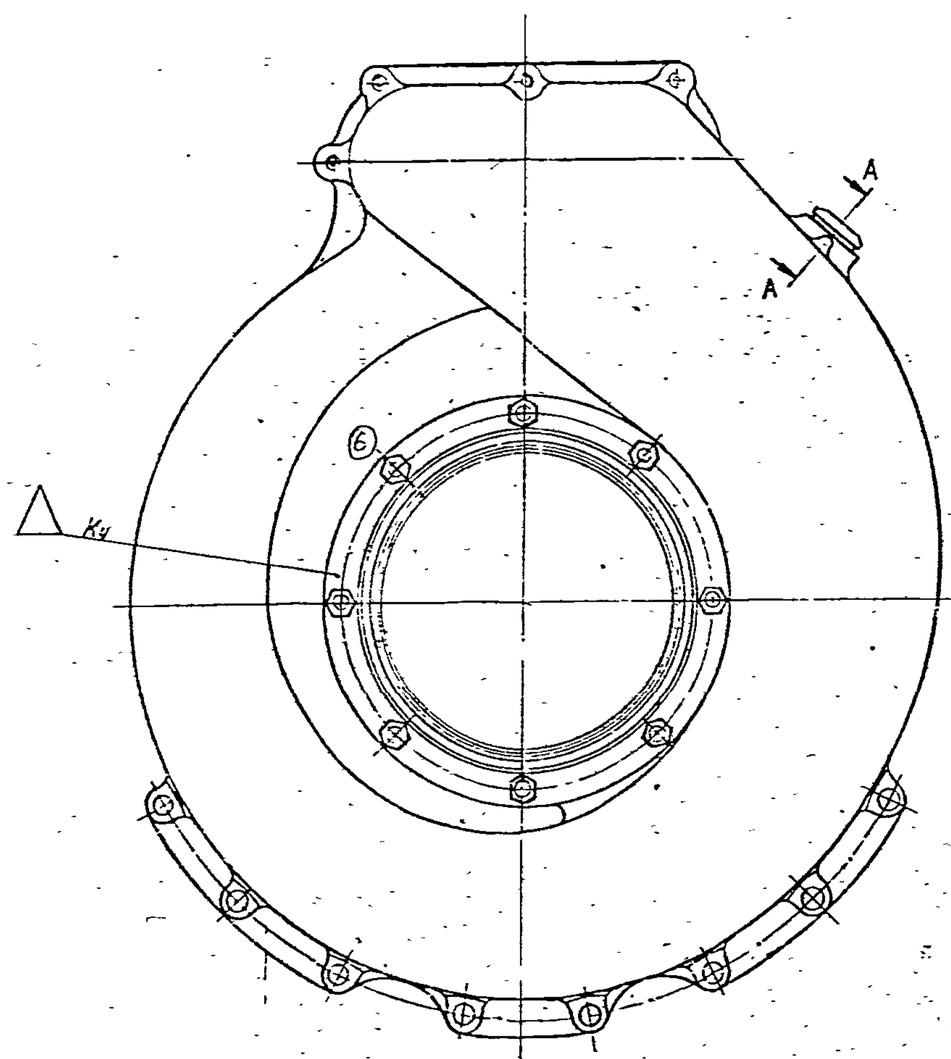

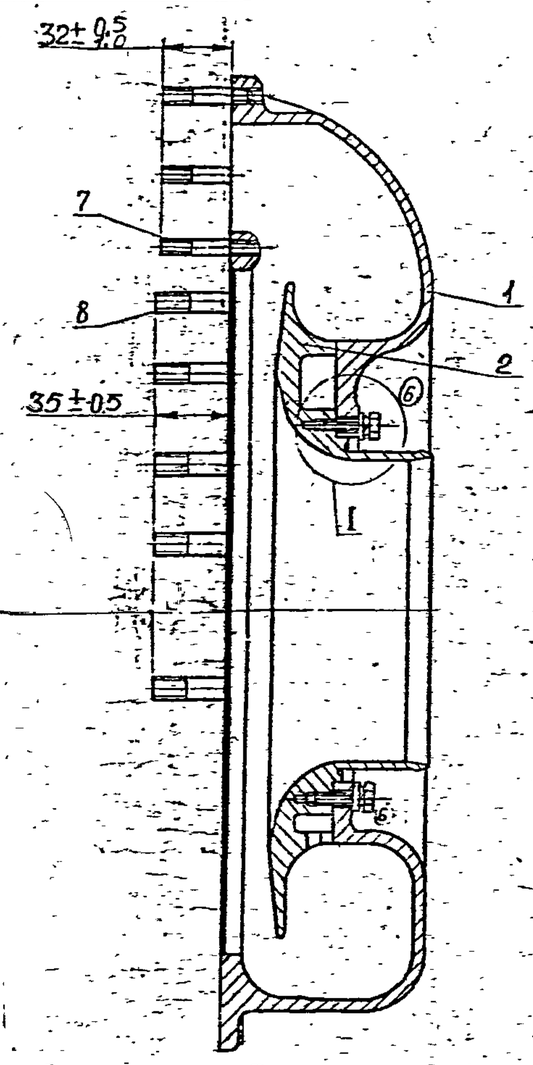

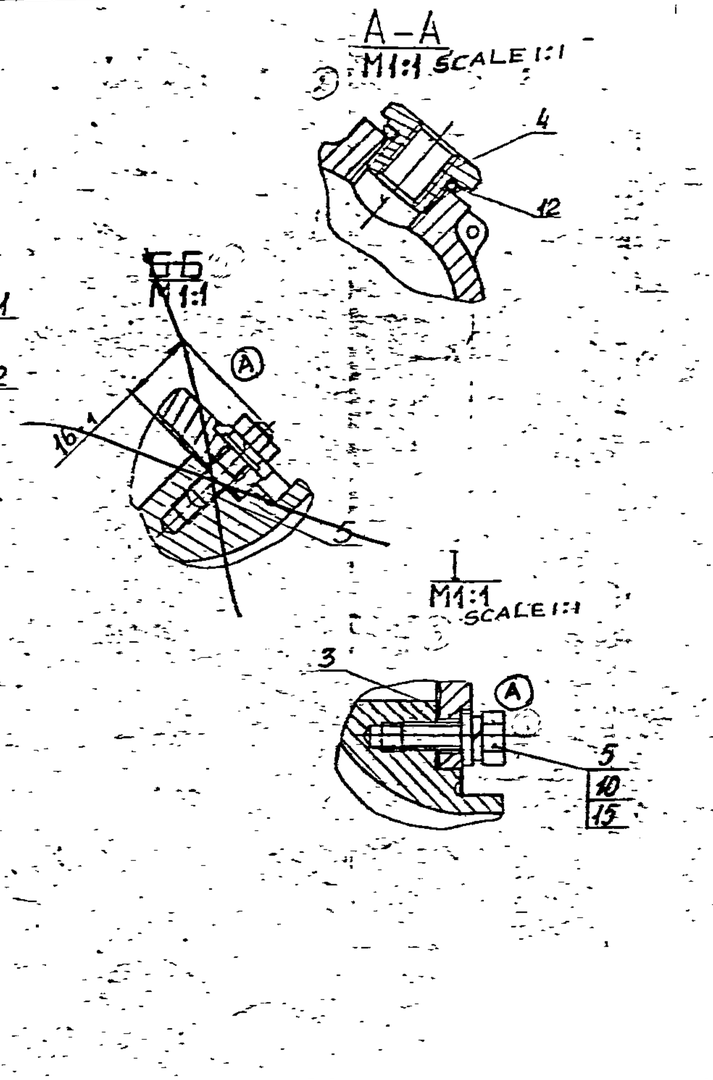

NOTE :-

(A) 1. FOR ASSEMBLY UNIT IN TROPICAL DESIGN, COMPONENTS HAVING CONVENTIONAL DESIGNATION 'ТИ' IN THE PARTS LIST OF GIVEN DRAWING IN COLUMN 'REMARKS' SHOULD HAVE TROPICAL DESIGN SPECIFIED IN THE COMPONENT DRAWINGS.

PLOT SAMPLE SHOULD BE APPROVED BY A H S P BEFORE BULK PRODUCTION.

EST. WT. 8,5 kg	TO BE STAMPED OR MARKED WHERE INDICATED THUS (LETTERS)

ALL SHARP EDGES AND CORNERS TO BE REMOVED UNLESS OTHERWISE STATED MACHINED CORNERS TO HAVE R OUTSIDE R INSIDE. EQUIVALENT CHAMFERS ARE PERMISSIBLE

ISSUE	DATE	NATURE OF AMENDMENTS
A	25-4-95	AUTHY. NOTN NO. BK-86-190, BK 87-724

DRN	
CHD	
TCD	
APPD	
DATE	11-4-95
SCALE	1:2
DIMENSIONS IN mm	
TOLERANCE ON DIMNS UNLESS OTHERWISE STATED IS 2102-69	
ALL THREADS TO CONFORM TO	

MATERIAL :-

USED ON
C6 3338-401-10

CONTROLLERATE OF QUALITY ASSURANCE (HEAVY VEHICLES)
AVADI

TITLE :
VOLUTE WITH DISC ASSY

D S CAT NUMBER

DRAWING NUMBER
C63338-404-7

RECEIVED VIDE NOTN NO BK 87-724

SIZE A2

USED ON	ITEM	DRAWING NUMBER	D S CAT NUMBER	DESCRIPTION	No. OFF	REMARKS
СБ 3338-404-10		СБ 3338-404-7		VOLUTE WITH DISC ASSY		
		& ITEM LIST				
(A)	1	3338-422-1(2 SHTS)		VOLUTE	1	TROPICAL MAKE
	2	3338-423-5		VOLUTE DISC	1	
	3	3338-479		BRANCH PIPE GASKET	1	
(A)	4	301-106-1		BUSH	1	TROPICAL MAKE
(A)	5	356-84-1		BOLT M6 X 20	8	
	7	350-33-2		STUD M6 X 45	8	
	8	350-37		STUD M8 X 51	10	
(A)	~~9~~	—				
	10	353-04-1		BRIGHT WASHER 6	8	TROPICAL MAKE
	12	355-08		RING 18 X 24	1	
	15	353-23		WASHER 6T 65Г.06	8	PL SEE EXPLANATORY NOTE IN ASSY.
				GOST 6402-70		TROPICAL MAKE

ISSUE	DATE	NATURE OF AMENDMENTS	ISSUE	DATE	NATURE OF AMENDMENTS
A	25.4.95	AUTH NOTN No. BK 86-190 & 87-724			

DRN.	Alia	CONTROLLERATE OF QUALITY ASSURANCE (HEAVY VEHICLES) AVADI		
CHD.		TITLE: VOLUTE WITH DISC ASSY		
TCD.	Alia			
APPD.				
DATE	28-4-95	SHT. No. 1 OF 1	D S CAT NUMBER	ITEM LIST FOR СБ 3338-404-7

USED ON

CB 3338-401-10

ITEM NO	DRAWING NUMBER	D S CAT NUMBER	DESCRIPTION	NO OFE	REMARKS
	CB 3338-405-4 CB		ASSEMBLY SUPER CHARGER		
	& ITEM LIST		ROTOR		
1	CB 3338-406		IMPELLER SHAFT	1	
	& ITEM LIST				
2	3338-138		NOZZLE	1	
3	3338-167		SPRING RING	1	
4	3338-429		SPACE RING	1	
5	3338-431-5		IMPELLER	1	
6	3338-433-2		IMPELLER SHAFT NUT	1	
7	3338-435-1		IMPELLER CAP	1	
(A) 8	3338-436-1		SCREW M10 x 28	1	TN TROPICAL MAKE
9	3338-452		WASHER	1	
(A) 10	3338-462-1		LOCK WASHER 12	1	TN TROPICAL MAKE
11	3338-473		OIL SEALING BUSH	1	

ISSUE	DATE	NATURE OF AMENDMENTS	ISSUE	DATE	NATURE OF AMENDMENTS
A	21-11-94	AUTHY. NOTN. NO. BK 86-190			

DRN		CONTROLLERATE OF INSPECTION (HEAVY VEHICLES) AVADI		
CHD		TITLE- ASSY. SUPER CHARGER ROTOR		
TCD				
APPD		SHEET 1 OF 1	D S CAT NUMBER	ITEM LIST FOR CB 3338-405-4CB
DATE	22-8-88			

CREATED BASED ON RUSSIAN ORIGINAL ISSUE-NIL (BK 84-225)

СБ 3338-405-4СБ

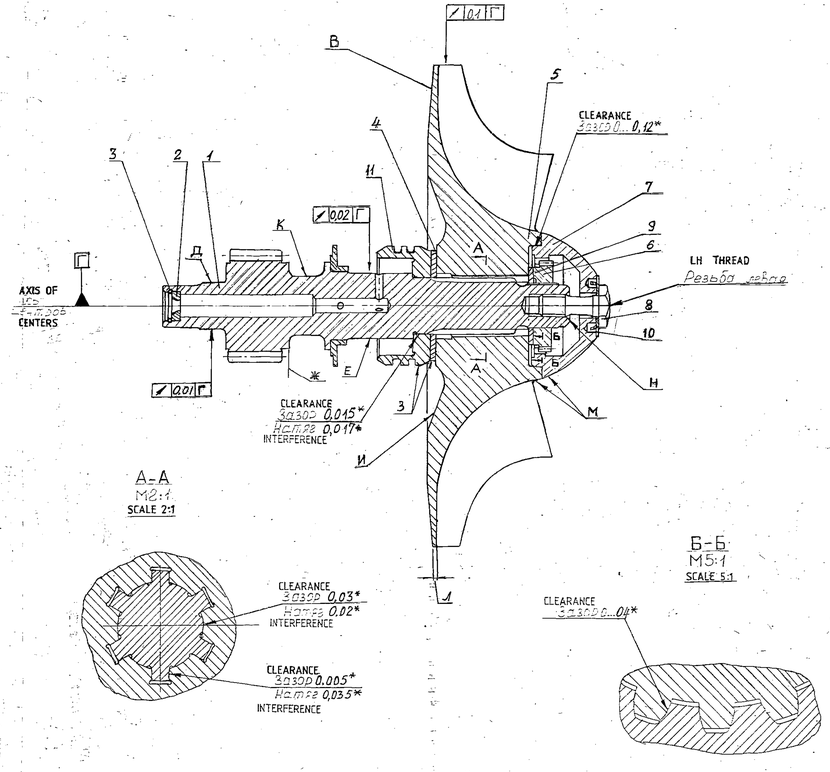

10. В местах снятия металла при балансировке обеспечить плавный переход к незатронутым поверхностям зачисткой и полировкой. В местах снятия металла допускается отсутствие покрытия.

11. После балансировки нанести метки взаимного расположения деталей в местах: 3 - электрографом, 1 - кернером, Н - напильником.

На детали поз. 4 допускается нанесение метки до балансировки. При окончательной сборке допускается несовпадение меток на деталях поз. 7 и 5 в пределах толщины одного шлица.

12. Детали поз. 2 и 3 допускается устанавливать при окончательной сборке нагнетателя.

13. Ротор, предназначенный в запасные части, балансировать с кольцом поз. 4 толщиной 3,5мм; отправку производить без проставочного кольца. Допускается производить отправку в запасные части с кольцом поз. 4.

14. Ротор сдавать с паспортом.

15. Размеры для справок.

TECHNICAL REQUIREMENTS IN RUSSIAN

1. Перед напрессовкой крыльчатку поз. 5 нагреть до температуры (110±10) °С. Прессовать до упора.

2. Затяжку детали поз. 6 производить моментом 90Н·м±10Н·м (9кгс·м±1кгс·м) при остывшей крыльчатке с предварительным обжатием деталей в горячем состоянии тем же моментом.

3. Допуск торцового биения поверхности В относительно оси центров 0,1мм без учета волнистости. Контролировать на ф190...200мм.

4. Допускается волнистость поверхности В между лопатками до 0,1мм.

5. Допуск радиального и торцового биения поверхностей контролировать без деталей поз. 2, 3, 7, 8, 10 до балансировки ротора.

6. Винт поз. 8 затянуть моментом 20Н·м (2кгс·м), стопорить при окончательной сборке нагнетателя.

7. Балансировать динамически на опорах Д и Е. Остаточный дисбаланс не более $1 \cdot 10^{-6}$ Н·м (1гс·см) для каждой опоры.

8. Балансировку ротора производить с кольцом поз. 4, подобранным из условия обеспечения заданного зазора между крыльчаткой и диском улитки при сборке нагнетателя.

9. При балансировке металл снимать с поверхности В в зоне ф160...ф220мм, постепенно увеличивая толщину снимаемого слоя в направлении к периферии крыльчатки до размера Л не менее 1мм, с поверхности И в зоне ф80...140мм на глубину не более 0,5мм и с поверхности Ж, не задевая торцев зубьев поверхности К.

TECHNICAL REQUIREMENTS - TRANSLATED

1. Before press fitting, impeller 5 should be heated up to the temperature of (110±10°) C. To be press fitted up to the stop.
2. Component 6 is to be tighfened with torque of 90 N/m±10 N/m (9 kg.f/cm±1kg.f/cm) with cooled impeller with previously compressed hot components with same torque.
3. Tolerance on end play of surface B relative to axis of centres should be 0.1mm regardless of waviness. The end play is to be checked at ф 190.....200mm.
4. Waviness on surface B between blades up to 0.1 is allowed.
5. Tolerance on radial run out and end play of surfaces is to be checked without components 2,3,7,8,10 before balancing the rotor.
6. Screw 8 should be torqued to 20N/m±5N/m (2 kg.f cm±0.5kg.f cm) To be stopped during final assembly of supercharger.
7. Running balance should be provided on base surface Д and E. Residual debalance should not exceed 1.10^{-6} N/M (1g.cm) for each base.
8. Rotor should be balanced with ring 4 selected to ensure specified clearance between impeller and the volute during supercharger assembly.
9. During balancing, metal should be removed from surface "B" at ф 160.....ф220mm. The layer of removed metal is to be gradually increased towards the impeller periphery untill dimension Л is at least 1mm, metal from surface И at ф 80.....140mm should be removed to a depth of not more than 0.5mm and during removing of metal from surface Ж, faces of teeth and surface K should not be touched.
10. During balancing, smooth transition from places with metal removed to the unaffected surface should be ensured by dressing and polishing. Places which metal removed may be left without coating.
11. After balancing, the relative position of components should be marked at places : 3 - with electrograph, M - by punching, H - with file. It is allowed to put mark on component 4 before balancing. During final assembly mismatch of marks on components 7 and 5 should be within the thickness of one spline.
12. Components 2 and 3 may be installed during final assembly of supercharger.
13. Rotor intended for spares should be balanced with ring 4 having 3.5mm thick. To be delivered without spacer. May be sent as spares with ring 4.
14. Rotor should be accompanied by a certificate.
15. * Dimensions for reference.
16. (A) FOR ASSEMBLY UNIT IN TROPICALIZED MAKE THE COMPONENTS AVAILABLE IN THE PARTS LIST OF GIVEN DRAWING IN COLUMN "REMARKS" CONVENTIONAL DESIGNATION "ТИ" HAVE TROPICALIZED MAKE AS SPECIFIED IN THE DRAWING FOR COMPONENTS.

1	Изм.	Вх. 84-225	Подп.
Разм. листа в зоне	Изм.	Подп.	Дата

PILOT SAMPLE SHOULD BE APPROVED BY A H S P BEFORE BULK PRODUCTION.

EST. MASS	TO BE STAMPED OR MARKED WHERE INDICATED THUS ⊕
2.6 kg	LETTERS)

ALL SHARP EDGES AND CORNERS TO BE REMOVED UNLESS OTHERWISE STATED MACHINED CORNERS TO HAVE R' OUTSIDE R INSIDE EQUIVALENT CHAMFERS ARE PERMISSIBLE.

ISSUE	DATE	NATURE OF AMENDMENTS
A	21-2-86	AUTHY NOTN NO BX. 86-190

DRN		MATERIAL :-
CHD		
TCD		
APPD		
DATE	22-9-88	
SCALE	1 : 1	
DIMENSIONS IN mm		
TOLERANCE ON DIMNS UNLESS OTHERWISE STATED		
ALL THREADS CONFORM TO		

USED ON :- СБ 3338-401-10

CONTROLLERATE OF QUALITY ASSURANCE (HEAVY VEHI A V A D I

TITLE :- ASSY. SUPERCHARGER ROTOR

D S CAT NUMBER

DRAWING NUMBER СБ 3338-405-4СБ

Al-K6-3

USED ON

CB 3338-405-4

ITEM	DRAWING NUMBER	D S CAT NUMBER	DESCRIPTION	No OFF	REMARKS
	CB 3338-406		SHAFT, IMPELLER ASSY		
	& ITEM LIST				
1	3338-430		SHAFT IMPELLER	1	
2	3338-131		THRUST JOURNAL	1	

ISSUE	DATE	NATURE OF AMENDMENT	ISSUE	DATE	NATURE OF AMENDMENTS

DRN		CONTROLLERATE OF INSPECTION(HEAVY VEHICLES) AVADI		
CHD		TITLE SHAFT IMPELLER ASSY		
TCD				
APPD				
DATE	2-6-87	SHT No 1 OF 1	D S CAT NUMBER	ITEM LIST FOR CB 3338-406

DRAWING NUMBER
СБ 3338-406 СБ

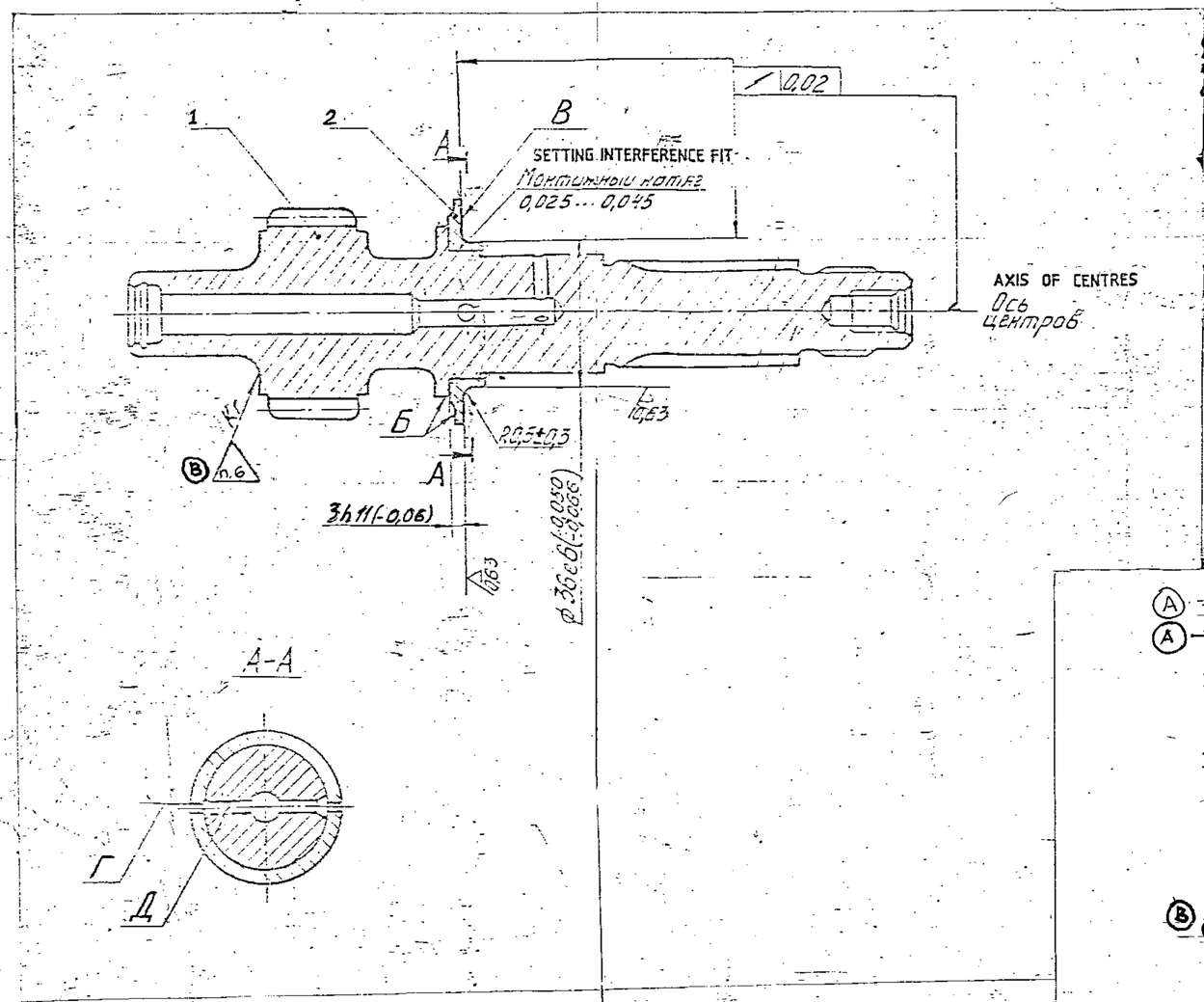

1. Соосность отверстий Г и Д проверять калибром ф 1,5 мм.

2. Поверхность В проверять по краске, отпечаток должен быть равномерным и охватывать не менее 85 % площади.

3. Детали поз. 1 и поз. 2 устанавливать одноименных групп.

4. На поверхностях Б нанести электрографом метку спаренности.

5. Дефекты на поверхностях пяты поз. 1 не допускаются, проверку производить на магнитном дефектоскопе по ТТ UB-17.

(A) 1. CHECK THE ALIGNMENT OF HOLES Г & Д USING A GAUGE OF 1·6 MM.

(A) ~~1. ALIGNMENT OF HOLES Г AND Д SHOULD BE CHECKED WITH A GAUGE ф 1,5mm.~~

2. SURFACE 'B' SHOULD BE CHECKED BY BLUEING. THE IMPRINT SHOULD BE UNIFORM AND COVER NOT LESS THAN 85% OF THE AREA.

3. COMPONENTS 1 AND 2 TO BE SET FROM SIMILAR GROUPS.

4. MATCHING MARK SHOULD BE PUT WITH ELECTROGRAPH ON SURFACES Б.

5. DEFECTS ARE NOT ALLOWED ON THE SURFACES OF THRUST JOURNAL 1. CHECKING IS TO BE CARRIED OUT WITH MAGNETIC - FIELD FLAW DETECTOR AS PER TR UB - 17.

(B) 6. TO MARK BY ELECROSPARK OR ELECTROCHEMICAL METHODS.

PILOT SAMPLE SHOULD BE APPROVED BY A H S P BEFORE BULK PRODUCTION.

EST. WT. 0,890 Kg.

TO BE STAMPED OR MARKED WHERE INDICATED THUS # (LETTERS)

ALL SHARP EDGES AND CORNERS TO BE REMOVED UNLESS OTHERWISE STATED MACHINED CORNERS TO HAVE R OUTSIDE R INSIDE EQUIVALENT CHAMFERS ARE PERMISSIBLE.

ISSUE	DATE	NATURE OF AMENDMENTS
B	30-8-95	AUTHY NOTH. No. BK 88-226
A	4-9-94	AUTHY. BK. NO. 81-301

DRN	—
CHD	
TCD	
APPD	
DATE	22-8-88
SCALE :-	1 : 1
DIMENSIONS IN mm.	
TOLERANCE ON DIMNS UNLESS OTHERWISE STATED IS 2102-69	
ALL THREADS TO CONFORM TO	—

MATERIAL :- —

USED ON :- СБ 3338-405-4

CONTROLLERATE OF QUALITY ASSURANCE (HEAVY VEHICLES)
A V A D I

TITLE SHAFT, IMPELLER ASSY.

D S CAT NUMBER

DRAWING NUMBER СБ 3338-406 СБ

DRG: INDIANISED BASED ON RUSSIAN ORIGINAL ISSUE No: NIL (BK 03 - 127)

A-9
46

SIZE A2

DRAWING NUMBER
СБ 3338-409

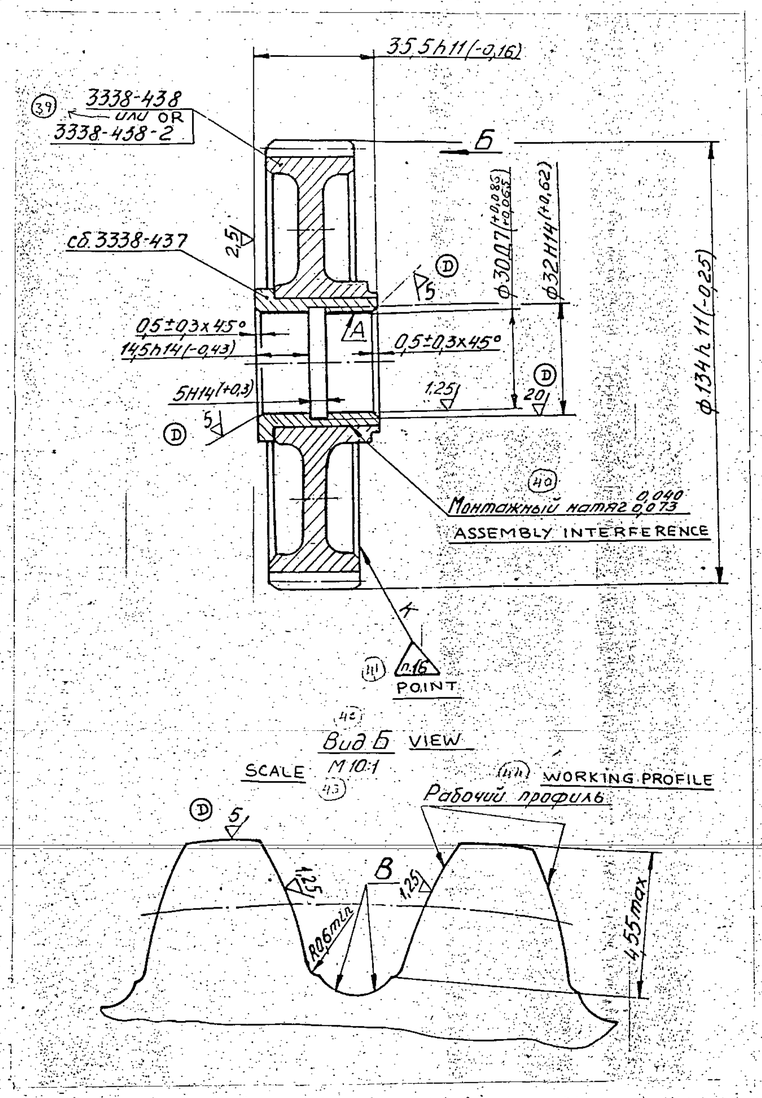

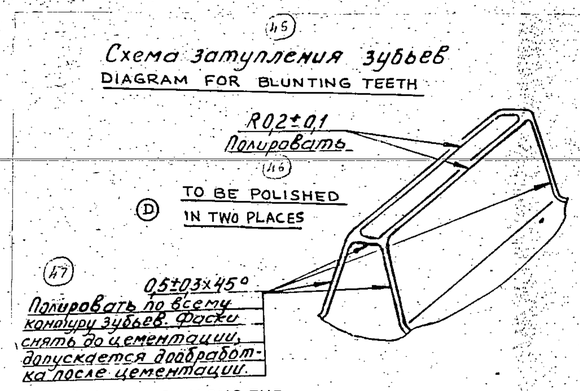

TO BE POLISHED ALONG THE ENTIRE CONTOUR OF TEETH. CHAMFERS SHOULD BE MADE BEFORE CARBURIZATION. FINISHING IS ALLOWED AFTER CARBURIZATION.

1. BEFORE PRESS-FITTING THE BUSH, THE GEAR SHOULD BE HEATED IN OIL UPTO THE TEMPERATURE OF 100 .... 120°C.
2. REFITTING IS ALLOWED NOT MORE THAN ONCE WITH REPLACEMENT OF BUSH.
3. CARBURIZING DEPTH FOR TEETH PROFILE IS h 0.6 .... 0.9mm, FOR TIP CIRCLE IS h 0.5 .... 0.9mm ; HRC э ≥ 59.
4. FINISH OF SURFACE "A" SHOULD BE ACCEPTED AS PER STANDARD.
5. (D) TOOL LONGITUDINAL MARK TO A DEPTH OF NOT MORE THAN 0.03mm IS ALLOWED ON THE SURFACE A.
6. RUN-OUT OF TEETH TIP CIRCLE RELATIVE TO SURFACE 'A' SHOULD NOT EXCEED 0.05mm.
7. CONICITY AND ELLIPTICITY OF SURFACE A SHOULD NOT EXCEED 0.01mm.
8. AFTER FINAL MACHINING THE THICKNESS OF LEADED BRONZE LAYER ALONG THE END FACE OF ASSEMBLED COMPONENT SHOULD BE $(0.6 \pm {}^{0.74}_{0.17})$ mm. AFTER FINAL MACHINING THE RADIAL THICKNESS OF LEADED BRONZE LAYER OF ASSEMBLED COMPONENT SHOULD BE (0.75 ± 0.25) mm ; TO BE ENSURED BY TECHNOLOGY.
9. SHARP EDGES ARE TO BE BLUNTED.
10. QUALITY OF TEETH ENGAGEMENT SHOULD BE CHECKED BY BLUEING BY RUNNING-IN WITH STANDARD GEAR. IN THIS CASE, BLUE-IMPRINT SHOULD COVER 55% OF MIDDLE PORTION OF TOOTH FLANK IN HEIGHT AND 80% MIN IN LENGTH. THE IMPRINT SHOULD BE AS PER ЦВ-89-3 Д.
11. TOTAL ERROR OF DISTORTION SHOULD BE CHECKED, IF THE TEETH ARE NOT CHECKED BY BLUEING.
12. GEARING ENGAGEMENT SHOULD BE CHECKED RELATIVE TO SURFACE A.
13. MACHINING, DENTS AND CUTS ARE NOT ALLOWED ON SURFACE B.
14. BURNS ON THE GROUND SURFACE OF TEETH PROFILE ARE NOT ALLOWED.
15. AFTER GRINDING THE TEETH, THE UNIT IS TO BE CHECKED ON MAGNETIC-FIELD FLAW DETECTOR AND ACCEPTED ACCORDING TO T T ЦВ-17.
16. TO BE STAMPED BY ELECTRO-CHEMICAL METHOD.

MODULE			m	2.5
NUMBER OF TEETH			z	52
BASIC RACK	PROFILE ANGLE		α_0	20°
	CO-EFFICIENT OF	ADDENDUM	f'	0.8
		DEDENDUM	f''	1.15
	FILLET RADIUS		z_i	1
ADDENDUM MODIFICATION CO-EFFICIENT			ξ	0
DEGREE OF ACCURACY AS PER GOST 1643-56			–	6-6-5
BASE TANGENT LENGTH			L	$42.41^{-0.07}_{-0.11}$
TOLERANCE ON BASE TANGENT LENGTH			$\delta_0 L$	0.022
TOLERANCE ON COMPOSITE ERROR DOUBLE FLANK	TOTAL		$\delta_0 a$	0.058
	TOOTH TO TOOTH		δ_{ya}	0.022
BASE PITCH			t_0	7.38±0.01
MAXIMUM DIFFERENCE OF BASE PITCHES OF SIMILAR PROFILES WITHIN THE GEAR			–	0.01
TO BE CHECKED IN CASE THE GEAR IS NOT CHECKED BY RUNNING-IN WITH STANDARD GEAR.	TOLERANCE ON PROFILE		δf	0.012
	TOLERANCE ON TOTAL ERROR OF DISTORTION.		δB_0	0.01
	TOLERANCE ON RADIAL RUN-OUT OF TOOTHED RIM		E_0	0.038
BASE CIRCLE DIAMETER			d_0	122.16
RADIUS OF INVOLUTE CURVATURE AT THE START OF PROFILE WORKING SECTION			ρ_0	16.9

PILOT SAMPLE SHOULD BE APPROVED BY A H S P BEFORE BULK PRODUCTION.

EST. WT.	TO BE STAMPED OR MARKED WHERE INDICATED THUS #
1.28 Kg	(LETTERS)

ALL SHARP EDGES AND CORNERS TO BE REMOVED UNLESS OTHERWISE STATED MACHINED CORNERS TO HAVE R OUTSIDE OR INSIDE EQUIVALENT CHAMFERS ARE PERMISSIBLE

ISSUE	DATE	NATURE OF AMENDMENTS
D	23-8-95	AUTHY. NOTN. No. BK-86-716, BK90-374.

DRN	
CHD	
TCD	
APPD	
DATE	18-05-96
SCALE	1 : 1
DIMENSIONS IN mm	
TOLERANCE ON DIMNS UNLESS OTHERWISE STATED IS 2102 - 69	
ALL THREADS TO CONFORM TO	

MATERIAL :- —

USED ON :- СБ 3338-401-10

CONTROLLERATE OF QUALITY ASSURANCE (HEAVY VEHICLES) AVADI.

TITLE: IDLE GEAR WITH BUSH ASSY

D S CAT NUMBER

DRAWING NUMBER СБ 3338-409

USED ON

Cb 3338-421-10

ITEM NO	DRAWING NUMBER	D S CAT NUMBER	DESCRIPTION	NO OFF	REMARKS
	CB 3388-409 & ITEM LIST		ASSEMBLY IDLE GEAR WITH BUSH		
1	CB 3338-437 & ITEM LIST		GEAR BUSH	1	
(B) 2	3338-438 OR 3338-438-2		IDLER GEAR	1	
(A) ~~3~~	~~356-57~~		~~LOCK WOOD SCREW~~	~~1~~	

ISSUE	DATE	NATURE OF AMENDMENTS	ISSUE	DATE	NATURE OF AMENDMENTS
B	11-2-95	AUTHY NOTN No BK 83-95			
A	5-7-88	AUTHY BK [illegible]			

DRN	[illegible]	CONTROLLERATE OF INSPECTION (HEAVY VEHICLES) AVADI		
CHD	[illegible]	TITLE:- ASSY. IDLE GEAR WITH BUSH		
TCD	[illegible]			
APPD	[illegible]	SHEET 1 OF 1	D S CAT NUMBER	ITEM LIST FOR CB 3338-409
DATE	12-7-88			

L/L SEPERATELY CREATED BASED ON RUSSIAN ORIGINAL ISSUE-14 (BK 82-441)

Cb 3338-414 Cb

ЕСКД

СВК 84-248

DRG INDIANISED BASED ON RUSSIAN ORIGINAL OF 2

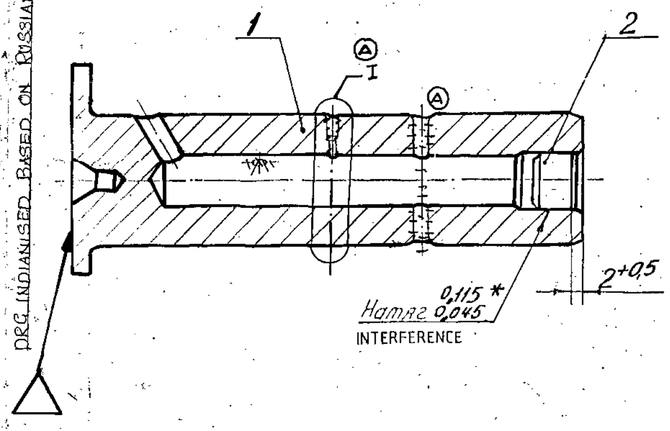

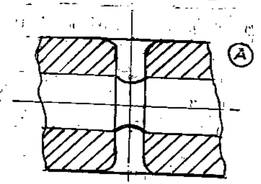

TECHNICAL REQUIREMENTS IN RUSSIAN

1. Перед запрессовкой заглушки ось нагреть до температуры (95±5) °С.

2. После запрессовки заглушки ось опрессовать маслом МТ-16П давлением 1МПа±0,1МПа (10 кгс/см² ±1 кгс/см²) и температурой (80±10) °С в течение 2х минут, течь по заглушке не допускается.

3. В тропическом исполнении деталь, имеющая в спецификации данного чертежа (в графе „Примечание) условное обозначение ТИ, должна иметь тропическое исполнение, предусмотренное рабочим чертежом.

4. * Размер для справок.

TECHNICAL REQUIREMENTS TRANSLATED

1. BEFORE PRESS- FITTING OF THE PLUG , THE AXLE SHOULD BE HEATED TO A TEMPERATURE OF (95±5) °C.

B ~~2. AFTER PRESS FITTING OF PLUG , AXLE SHOULD BE SUBJECTED TO HYDROSTATIC TEST WITH OIL MT-16П UNDER PRESSURE OF 1 MPa ± 0.1 MPa (10 Kgf/cm² ± 1 Kgf/cm²) AND AT TEMPERATURE OF (80±10)°C FOR TWO MINUTES . LEAKAGE IS NOT ALLOWED.~~

3. COMPONENT MARKED WITH DESIGNATION TM IN COLUMN " REMARKS " OF THE PARTS LIST OF GIVEN DRAWING SHOULD BE OF TROPICALIZED CONSTRUCTION , SPECIFIED IN THE WORKING DRAWING.

4. * DIMENSION FOR REFERENCE.

B **2. TEST THE AXLE FOR AIR TIGHTNESS BY OIL MT-16П GOST 6360-83 OR OIL M-16ИХП-3(M-16B2) GOST 25770-83 AT A PRESSURE OF (1±0.1) MPa ((10±1) Kgf/cm²) AND TEMPERATURE (80±10°C) FOR 2 MINUTES. LEAKAGE ALONG THE PLUG IS NOT ALLOWED.**

PILOT SAMPLE SHOULD BE APPROVED BY A H S P BEFORE BULK PRODUCTION

			EST MASS 0.695 Kg	TO BE STAMPED OR MARKED WHERE INDICATED THUS # (LETTERS)
B	31-8-95	AUTHY. NOTN. NO. BK 86-792	ALL SHARP EDGES AND CORNERS TO BE REMOVED UNLESS OTHERWISE STATED. MACHINED CORNERS TO HAVE R OUTSIDE R INSIDE EQUIVALENT CHAMFERS ARE PERMISSIBLE	
A	30-5-94	AUTHY. NOTN. NO. BK-86-414		
ISSUE	DATE	NATURE OF AMENDMENTS		
DRN		SCALE:- 1:1	MATERIAL:-	USED ON:- Cb 3338-401-10
CHD		DIMENSIONS IN mm		
TCD		TOLERANCE ON DIMNS UNLESS OTHERWISE STATED	CONTROLLERATE OF INSPECTION (HEAVY VEHICLES) AVADI	
APPD			TITLE:- ASSEMBLY AXLE	
DATE 22-8-88		ALL THREADS CONFORM TO	D S CAT NUMBER	DRAWING NUMBER Cb 3338-414 Cb

2 Замен 08.SV-2KS

USED ON

СБ 3338-401-10

ITEM NO	DRAWING NUMBER	D S CAT NUMBER	DESCRIPTION	NO OFF	REMARKS
	СБ 3338-414 СБ		ASSEMBLY AXLE		
	& ITEM LIST				
1	3338-450		GEAR UNIT AXLE	1	ТИ
2	346-29-1		PLUG	1	

ISSUE	DATE	NATURE OF AMENDMENTS	ISSUE	DATE	NATURE OF AMENDMENTS

DRN		CONTROLLERATE OF INSPECTION (HEAVY VEHICLES) AVADI		
CHD		TITLE:- ASSY. AXLE		
TCD				
APPD		SHEET 1 OF 1	D S CAT NUMBER	ITEM LIST FOR СБ 3338-414
DATE	22-8-88			

ISSUE CREATED BASED ON RUSSIAN ORIGINAL ISSUE-NIL (BK 84-243)

I/L CREATED BASED ON RUSSIAN ORIGINAL ISSUE-NIL (BK85-477) C53338-401-10

USED ON	ITEM	DRAWING NUMBER	D S CAT NUMBER	DESCRIPTION	No OFF	REMARKS
		C6 3338-416 C6 &		FLANGE, OIL SUPPLY ASSY		
		ITEM LIST				
	1	3338-161		OIL SUPPLY PIPE	1	
	2	3338-475		PIPE FLANGE	1	

ISSUE	DATE	NATURE OF AMENDMENTS	ISSUE	DATE	NATURE OF AMENDMENTS

DRN	—	CONTROLLERATE OF QUALITY ASSURANCE (HEAVY VEHICLES) AVADI		
CHD		TITLE FLANGE OIL SUPPLY ASSY		
TLD				
APPD		SHT No 1 OF 1	D S CAT NUMBER	ITEM LIST FOR C6 3338-416
DATE	22-8-88			

DRAWING NUMBER
СБ 3338-416СБ

ЕСКД

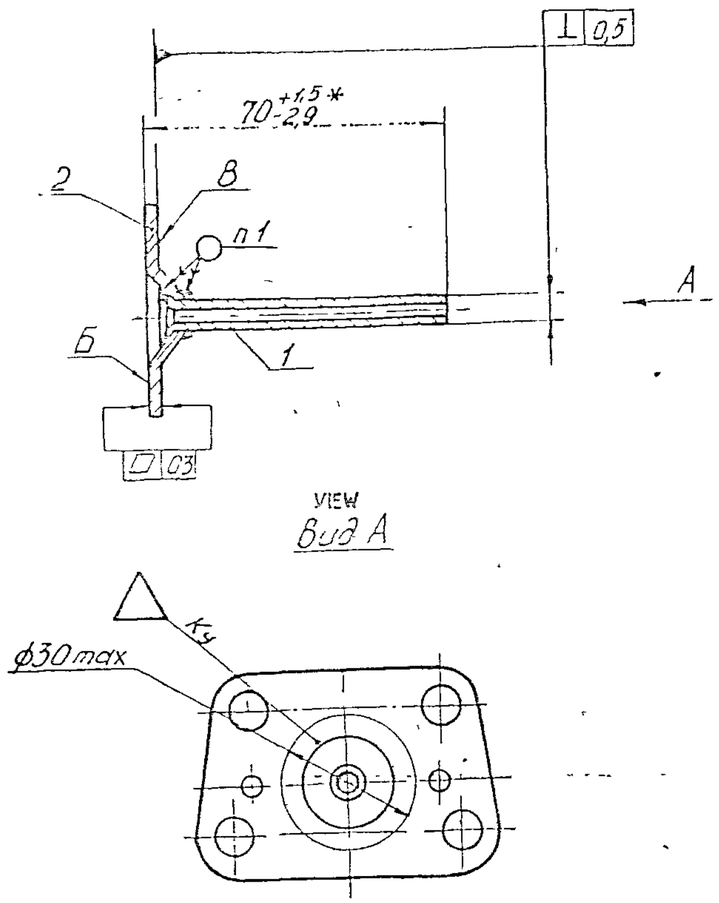

1 Проволока ЛБ3 ГОСТ 12920-67

2 На поверхностях Б и В риски от опиловки не допускаются

3 Допускается правка трубки и фланца.

4. Покрытие Хим Окс. прм.

5. В тропическом исполнении покрытие Кд 9 хр по УЛ-569-84 с последующим удалением водородной хрупкости.

6* Размер для справок

1. Wire ЛБ 63 GOST 12920 - 67.

2. Marks out of drawing are not allowed on surfaces Б and В

3. It is allowed to straighten Pipe and Flange.

4. Coating. Chemical oxidation and oiling.

5. For tropical use: Coating should be Cd9 cr as per УЛ-569 - 84 with following removal of hydrogen Embrittlement

6. * Dimension for reference

PILOT SAMPLE SHOULD BE APPROVED BY A H S P BEFORE BULK PRODUCTION

EST. WT. 0,036 Kg.	TO BE STAMPED OR MARKED WHERE INDICATED THUS # (LETTERS)

ALL SHARP EDGES AND CORNERS TO BE REMOVED UNLESS OTHERWISE STATED MACHINED CORNERS TO HAVE R OUTSIDE R INSIDE EQUIVALENT CHAMFERS ARE PERMISSIBLE.

ISSUE	DATE	NATURE OF AMENDMENTS

DRN	
CHD	
TCD	
APPD	
DATE	22-8-88
SCALE	- 1 1
DIMENSIONS IN mm	
TOLERANCE ON DIMNS UNLESS OTHERWISE STATED IS 2102-69	
ALL THREADS TO CONFORM TO	

MATERIAL - —

USED ON - СБ 3338-401-10

CONTROLLERATE OF QUALITY ASSURANCE (HEAVY VEHICLES) AVADI

TITLE FLANGE, OIL SUPPLY ASSY

D S CAT NUMBER

DRAWING NUMBER СБ 3338-416СБ

DRG. INDIANISED BASED ON RUSSIAN ORIGINAL ISSUE-5 (DK 85-477)

ZE A2

USED ON

Сб 3338-402-4

ITEM	DRAWING NUMBER	D S CAT NUMBER	DESCRIPTION	No. OFF	REMARKS
	Сб 3338-427 сб		BUSH BODY ASSY		
	& ITEM LIST				
1	3338-500		BUSH BODY	1	DETAILS COVERED IN ASSY. INO DRG
			STEEL 15 GOST 1050-74		
2			Бр С-30 GOST 493-79 ⊗	0,031	
		⊗	Please see the material Explanatory note in the Assy. drg.		

ISSUE	DATE	NATURE OF AMENDMENTS	ISSUE	DATE	NATURE OF AMENDMENTS

I/E CREATED BASED ON RUSSIAN ORIGINAL ISSUE-NIL (BK 82-596)

DRN	—	CONTROLLERATE OF QUALITY ASSURANCE (HEAVY VEHICLES) AVADI.		
CHD		TITLE: BUSH BODY ASSY		
TCD				
APPD		SHT. No. 1 OF 1	D S CAT NUMBER	ITEM LIST FOR Сб 3338-427
DATE	22-8-88			

DRAWING NUMBER
СБ 3338-427 СБ

ЕСКД

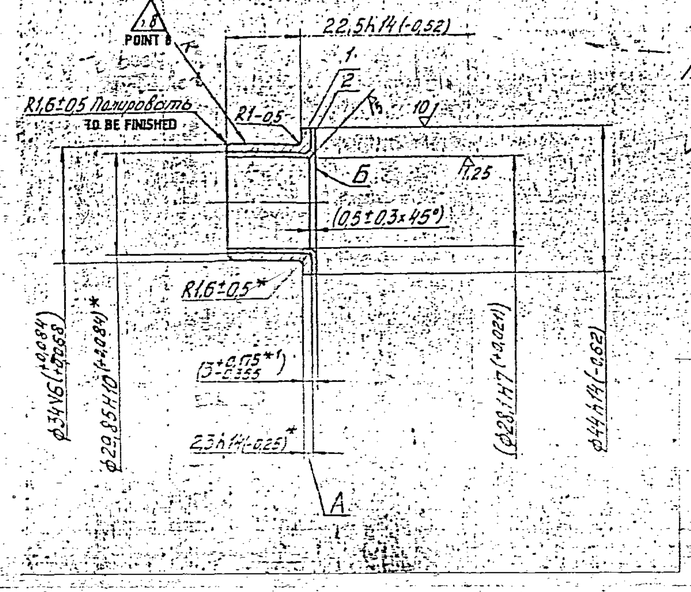

1. Заменитель материала сталь 10 ГОСТ 1050-74 для детали поз. 1.
2. Заливку свинцовистой бронзой и подготовку поверхностей втулки под заливку производить по ТТМ 43-77.
3. Толщина слоя свинцовистой бронзы после сборки: по торцу Б - 0,7мм $^{+0,525}_{-0,365}$ мм, радиальная - 0,8мм ± 0,25мм.
4. Допускается уменьшение размера А на 0,1мм сверх допуска.
5. Размеры в скобках - после сборки.
6.* Размеры для стали.
7.*1 Размер для справок.
8. Клеймить по ИЛ-16-73 раствором №1

1. ALTERNATE MATERIAL : STEEL 10 GOST 1050-74 FOR COMPONENT 1.
2. CASTING OF LEADED BRONZE AND PREPARATION OF BUSH SURFACES FOR CASTING - TO BE CARRIED OUT ACCORDING TO TTM 43 - 77.
3. THICKNESS OF LEADED BRONZE LAYER AFTER ASSEMBLY ALONG END FACE Б - 0,7 mm $^{+0,525}_{-0,365}$ mm. RADIAL - 0,8 mm ± 0,25 mm.
4. DIMENSION A MAY BE REDUCED TO 0,1 mm OF EXCEEDING TOLERANCE.
5. DIMENSION IN BRACKETS - AFTER ASSEMBLY.
6. * DIMENSION FOR STEEL
7. *1 DIMENSION FOR REFERENCE.
8. TO BE STAMPED WITH SOULUTION No: 1.

PILOT SAMPLE SHOULD BE APPROVED BY A H S P BEFORE BULK PRODUCTION.

EST. WT. 0,083 Kg

TO BE STAMPED OR MARKED WHERE INDICATED THUS # (LETTERS)

ALL SHARP EDGES AND CORNERS TO BE REMOVED UNLESS OTHERWISE STATED MACHINED CORNERS TO HAVE R OUTSIDE R INSIDE EQUIVALENT CHAMFERS ARE PERMISSIBLE.

ISSUE	DATE	NATURE OF AMENDMENTS

DRN —
CHD
TCD
APPD
DATE 22-8-88
SCALE :- 1:1
DIMENSIONS IN mm
TOLERANCE ON DIMNS UNLESS OTHERWISE STATED IS 2102-69
ALL THREADS TO CONFORM TO —

MATERIAL :- STEEL 15 GOST 1050-74 BRONZE БР-С-30 GOST 493-79.

USED ON :- СБ 3338-402-4

CONTROLLERATE OF QUALITY ASSURANCE (HEAVY VEHICLES) AVADI

TITLE BUSH BODY ASSY

D S CAT NUMBER

DRAWING NUMBER СБ 3338-427СБ

EXPLANATORY NOTE:

Material Quoted: Steel 15 GOST 1050-74 БРС-30 GOST 493-79 Stamping
БРС-30 : Alloy grade.
Tin free foundary bronze intruded for making casting
Alternate material quoted: Steel 10 GOST 1050-74.

Chemical composition (as per GOST 1050-74)

Grade of steel.	C	Si.	Mn.	Cr	P	S	Cu	Ni
				MAXIMUM				
10	0.07-0.14	0.17-0.37	0.35-0.65	0.15	0.035	0.040	0.25	0.25
15	0.12-0.19	0.17-0.37	0.35 0.65	0.15	0.035	0.040	0.25	0.25

Mechanical Properties: (as per GOST 1050-74)

Grade of steel	Tensile strength Kgf/mm² (min)	Yield point Kgf/mm² (min)	Elongation % (min)	Reduction in area (min)
10	34	21	31	55
15	38	23	27	55

Chemical Composition (as per БРС-30 GOST 493-79)

Impurities (max)

Main components: Lead = 27.0 - 31.0

Copper = Remainder
Arsenic = 0.1
Antimony = 0.3
Tin = 0.1
Silican = 0.02
Nickel = 0.5
Phosphorus = 0.1
Iron = 0.25
Zinc = 0.1
Total = 0.9

Mechanical Properties:

Ultimate strength Kgf/mm² = 6 (min)
Relative elongation % = 4 (min)
Brinnel hardness HB = 245 (min)

ORIG. INDIANISED BASED ON RUSSIAN ORIGINAL ISSUE No: NIL (DK 82-596)

SIZE A2

DRAWING NUMBER
СБ 3338-428 СБ

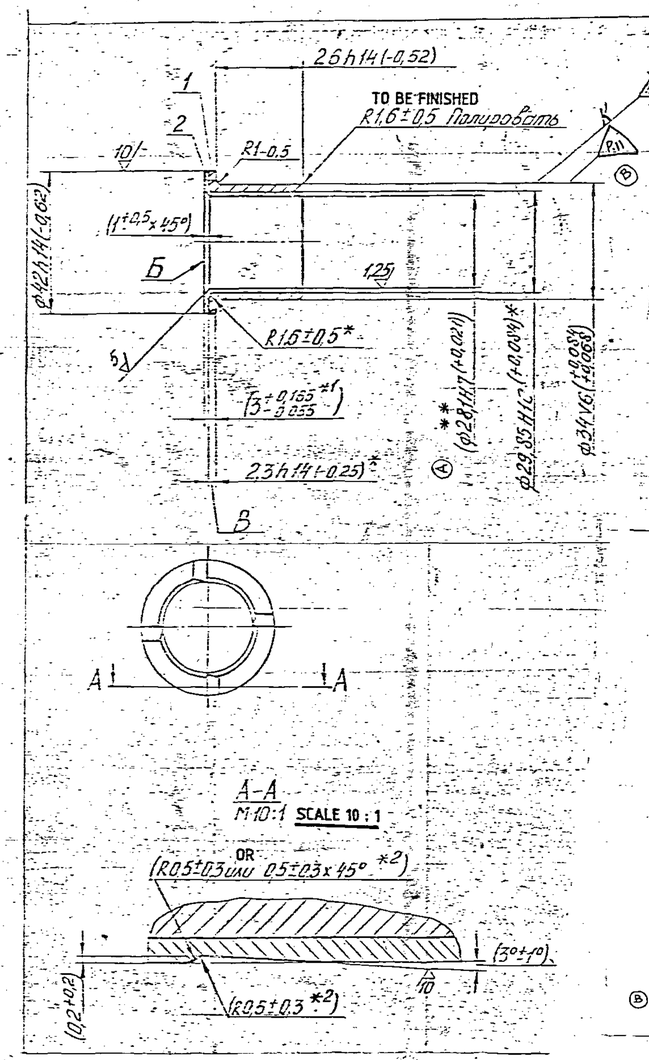

1. Заменитель материала сталь 10 ГОСТ 1050-74 для детали поз. 1.
2. Заливку свинцовистой бронзой и подготовку поверхностей втулки под заливку производить по ТТМ 43-77.
3. Толщина слоя свинцовистой бронзы после сборки по торцу Б - 0,7мм +0,415 -0,155 мм, радиальная - 0,8мм ± 0,25мм.
4. Допускается увеличение размера В на 0,1мм сверх допуска.
5. Размеры в скобках - после сборки.
6. * Размеры для стали.
7. *1 Размер для справок.
8. *2 Размеры обеспечить инструментом.
9. Клеймить по ОЛ-16-73 раствором №1.

1. ALTERNATE MATERIAL : STEEL 10 GOST 1050-74 FOR COMPNENT 1.
2. CASTING OF LEADED BRONZE AND PREPARATION OF BUSH SURFACES FOR CASTING TO BE CARRIED OUT AS PER TTM 43 - 77.
3. THICKNESS OF LEADED BRONZE LAYER AFTER ASSEMBLY ALONG END FACE b - 0,7 mm +0,415 -0,155 mm, RADIAL 0,8 mm ± 0,25 mm.
4. DIMENSION B MAY BE INCREASED TO 0,1 mm OF EXCEEDING TOLERANCE.
5. DIMENSIONS IN BRACKETS - AFTER ASSEMBLY.
6. *DIMENSIONS FOR STEEL.
7. *1 DIMENSION FOR REFERENCE.
8. *2 DIMENSIONS TO BE ENSURED WITH TOOL.
9. ~~TO BE MARKED WITH SOLUTION No. 1 ACCORDING TO ОЛ 16 - 73.~~

(A) 10. ** CUTTING ALLOWANCE OF 0.4 mm TO 0.9 mm IS ALLOWED ON INTERNAL DIMENSION OF THE BUSH.

11. ~~TO BE MARKED WITH SOLUTION No. 5 по ОЛ-581-85 или~~

(B) 11. TO MARK BY COMPOUND N1 OR N5 AS PER ОЛ-581-85 OR ELECTROCHEMICAL METHOD.

EXPLANATORY NOTE:

Material Quoted: steel 15 GOST 1050-74 БРС-30 GOST 493-79 Stamping
БРС-30 : Alloy grade.
Tin free foundary bronze intruded for making casting
Alternate material quoted: steel 10 GOST 1050-74.

Chemical composition (as per GOST 1050-74)

Grade of steel	C	Si.	Mn.	Cr	P	S	Cu	Ni
				MAXIMUM				
10	0.07-0.14	0.17-0.37	0.35-0.65	0.15	0.035	0.040	0.25	0.25
15	0.12-0.19	0.17-0.37	0.35 0.65	0.15	0.035	0.040	0.25	0.25

Mechanical Properties: (as per GOST 1050-74)

Grade of steel	Tensile strength kgf/mm² (min)	Yield Point kgf/mm²(min)	Elongation % (min)	Reduction in area (min)
10	34	21	31	55
15	38	23	27	55

Chemical Composition (as per БРС-30 GOST 493-79)

Impurities (max)

Main components: Lead = 27.0 - 31.0

Copper = Remainder
Arsenic = 0.1
Antimony = 0.3
Tin = 0.1
Silican = 0.02
Nickel = 0.5
Phosphorus = 0.1
Iron = 0.25
Zinc = 0.1
Total = 0.9

Mechanical Properties:

Ultimate strength kgf/mm² = 6 (min)
Relative elongation % = 4 (min)
Brinnel hardness HB = 245 (min)

PILOT SAMPLE SHOULD BE APPROVED BY A H S P BEFORE BULK PRODUCTION.

EST. WT.	TO BE STAMPED OR MARKED WHERE INDICATED THUS # (LETTERS)
0,086 Kg	

ALL SHARP EDGES AND CORNERS TO BE REMOVED UNLESS OTHERWISE STATED MACHINED CORNERS TO HAVE R OUTSIDE R INSIDE EQUIVALENT CHAMFERS ARE PERMISSIBLE.

ISSUE	DATE	NATURE OF AMENDMENTS
B	9-5-96	AUTHY BK 88-226
A	6-7-93	Authy Tel. no 93519 (V66-6) CGR(CVD) 21-5-JUN 93

DRN	—	
CHD		
TCD		
APPD		
DATE	22-8-88	
SCALE :- 1:1		
DIMENSIONS IN mm.		
TOLERANCE ON DIMNS UNLESS OTHERWISE STATED IS 2102-69		
ALL THREADS TO CONFORM TO		

MATERIAL :- STEEL GOST 1050-74 BRONZE БР С - 30 GOST 493-70

USED ON :- СБ 3338-403-2

CONTROLLERATE OF QUALITY ASSURANCE (HEAVY VEHICLES) AVADI

TITLE COVER BUSH

D S CAT NUMBER

DRAWING NUMBER СБ 3338-428 СБ

ORG. INDIANISED BASED ON RUSSIAN ORIGINL ISSUE No: NIL (BK 82-596).

A-9 / 63

SIZE A2

USED ON	ITEM	DRAWING NUMBER	D S CAT NUMBER	DESCRIPTION	No. OFF	REMARKS
		СБ 3338-428 СБ		COVER BUSH		
		& ITEM LIST				
	1	3338-501		COVER BUSH	1	DETAILS COVERED IN ASSY. (NO. DRG)
				STEEL 15 GOST 1050-74		
	2			Бр С - 30 GOST 493-79 (*)	0,031	
				(*) Please see the material explanatory note in the ASSY. drg.		

СБ 3338-403-2

I/L CREATED BASED ON RUSSIAN ORIGINAL ISSUE-NIL (BK 82-556)

ISSUE	DATE	NATURE OF AMENDMENTS	ISSUE	DATE	NATURE OF AMENDMENTS

DRN	—	CONTROLLERATE OF QUALITY ASSURANCE (HEAVY VEHICLES) AVADI		
CHD		TITLE: COVER BUSH		
TCD				
APPD				
DATE	22-8-88	SHT. No. 1 OF 1	D S CAT NUMBER	ITEM LIST FOR СБ 3338-428

СБ 3338 - 437-СБ

ЕСКД

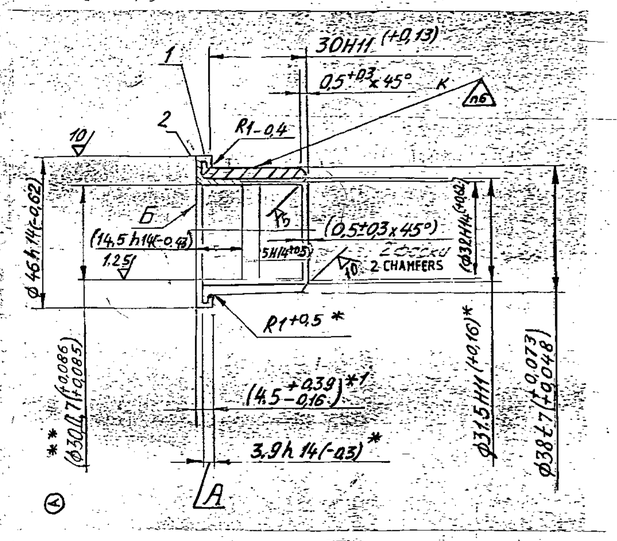

TECHNICAL REQUIREMENTS IN RUSSIAN

1. Заменитель материала бронзы по ГОСТ 1050-74 для детали поз 1.
2. Заливку свинцовистой бронзой и подготовку поверхностей втулки под заливку производить по ТТМ 43-77.
3. Толщина слоя свинцовистой бронзы после сборки по торцу Б - 0,6+0,16 мм, радиальная - 0,75±0,25 мм.
4. Допускается уменьшение размера А на 0,1 мм сверх допуска.
5. Размеры Б следует измерять после сборки.
6. Размеры для справок.
7. Размер для справок.

TECHNICAL REQUIREMENTS TRANSLATED

1. ALTERNATE MATERIAL STEEL 10 GOST 1050-74 FOR COMPONENT 1.
2. LEADED BRONZE IS TO BE FILLED AND BUSH SURFACES IS TO PREPARED AS TTM 43-77.
3. AFTER ASSEMBLY, THICKNESS OF LEADED BRONZE LAYER ON THE FACE Б SHOULD $0.6^{+0.16}_{-0.15}$mm AND RADIAL THICKNESS 0.75±0.25mm.
4. DIMENSION A MAY BE DECREASED BY 0.1mm ABOVE TOLERANCE.
5. DIMENSIONS GIVEN IN BRACKETS SHOULD BE OBTAINED AFTER ASSEMBLY.
6. ~~TO BE MARKED AS PER U.Л-16-73 WITH SOLUTION NO.1 OR NO. 3.~~ (B)
7. *DIMENSIONS FOR STEEL
8. *1 DIMENSION FOR REFERENCE
9. ** CUTTING ALLOWANCE OF 0·4mm TO 0·9mm IS ALLOWED ON INTERNAL DIMENSION OF THE BUSH. (A)
6. (B) TO BE MARKED BY COMPOUND N1 OR N5 AS PER U.Л-581-85 OR ELECTRO CHEMICAL METHOD.

PILOT SAMPLE SHOULD BE APPROVED BY A H S P BEFORE BULK PRODUCTION

B	10-5-86	AUTHY NOTN. No BK 88-226	
A	16-7-93	Authy letter no. 93519/ IV46-6/COA(CVE) 5-7-93	
ISSUE	DATE	NATURE OF AMENDMENTS	

EST. MASS 0.28 Kg

TO BE STAMPED OR MARKED WHERE INDICATED THUS # LETTERS)

ALL SHARP EDGES AND CORNERS TO BE REMOVED UNLESS OTHERWISE STATED. MACHINED CORNERS TO HAVE R OUTSIDE R INSIDE EQUIVALENT CHAMFERS ARE PERMISSIBLE

DRN — SCALE 1:1

CHD — DIMENSIONS IN mm

TCD — TOLERANCE ON DIMNS UNLESS OTHERWISE STATED

APPD

DATE 12-7-88 — ALL THREADS CONFORM TO

MATERIAL SEE EXPLANATORY NOTE

USED ON CB 3338-409

CONTROLLERATE OF INSPECTION (HEAVY VEHICLES) AVADI

TITLE ASSEMBLY GEAR BUSH

D S EAT NUMBER

DRAWING NUMBER CB 3338 -437 CB

9 3 82-441
8 Ram BK 83-551

EXPLANATORY NOTE :-

MATERIAL QUOTED: STEEL 15 GOST 1050-74 FOR COMPONENT-1.
ALTERNATE MATERIAL QUOTED: STEEL 10 GOST 1050-74 FOR COMPONENT-1
MATERIAL QUOTED: БРС-30 GOST 493-79. — FOR COMPONENT-2.
STEEL 10 & 15 = GRADE OF STEEL.
БРС-30 = GRADE BRONZE AS PER GOST 493-79.

a) CHEMICAL COMPOSITION :-

GRADE OF STEEL	C O N T E N T OF E L E M E N T S %							
	C	Si	Mn	Cr	P	S	Cu	Ni
				M A X I M U M				
10	0.07-0.14	0.17-0.37	0.35-0.65	0.15	0.035	0.040	0.25	0.25
15	0.12-0.19	0.17-0.37	0.35-0.65	0.25	0.035	0.040	0.25	0.25

b) MECHANICAL PROPERTIES :-

GRADE OF STEEL	ULTIMATE TENSILE STRENGTH Kgf/mm² (min)	YIELDPOINT Kgf/mm² (min)	% ELONGATION (min)	% REDUCTION IN AREA (MIN)
10	34	21	31	55
15	38	23	27	55

CHEMICAL COMPOSITION: % (AS PER БРС-30 GOST 493-79).

BASIC CONSTITUENT	IMPURITIES (MAXIMUM)									
LEAD	CU	ARSENIC	ANTIMONY	TIN	ZINC	Si	Ni	P	Fe	TOTAL
27.0-31.0	REMAINDER	0.1	0.3	0.1	0.1	0.02	0.5	0.1	0.25	0.9

MECHANICAL PROPERTIES: (AS PER GOST 493-79 FOR БРС-30).

ULTIMATE STRENGTH Kgf/mm²	RELATIVE ELONGATION %	BRINNEL HARDNESS HB
	MINIMUM	
6	4	245

NO	DRAWING NUMBER	D S CAT NUMBER	DESCRIPTION	NO OFF	REMARKS
	СБ 3338-437 СБ		ASSEMBLY GEAR BUSH		
	& ITEM LIST				
1	3338-437		GEAR BUSH	1	NO SEPERATE DRAWING
		*	STEEL 15 GOST 1050-74		
2			Бр. С-30 GOST 493-79	0.038kg	
		*	SEE EXPLANATORY NOTE IN ASSY.		

ISSUE	DATE	NATURE OF AMENDMENTS	ISSUE	DATE	NATURE OF AMENDMENTS

DRN		CONTROLLERATE OF INSPECTION (HEAVY VEHICLES) AVADI		
CHD		TITLE - ASSY. GEAR BUSH		
TCD				
APPD				
DATE	12-7-88	SHEET 1 OF 1	D S CAT NUMBER	ITEM LIST FOR СБ 3338-437

СБ 3338-409

CREATED BASED ON RUSSIAN ORIGINAL ISSUE-1 (BK 85-757)

DRAWING NUMBER
3338-438-2

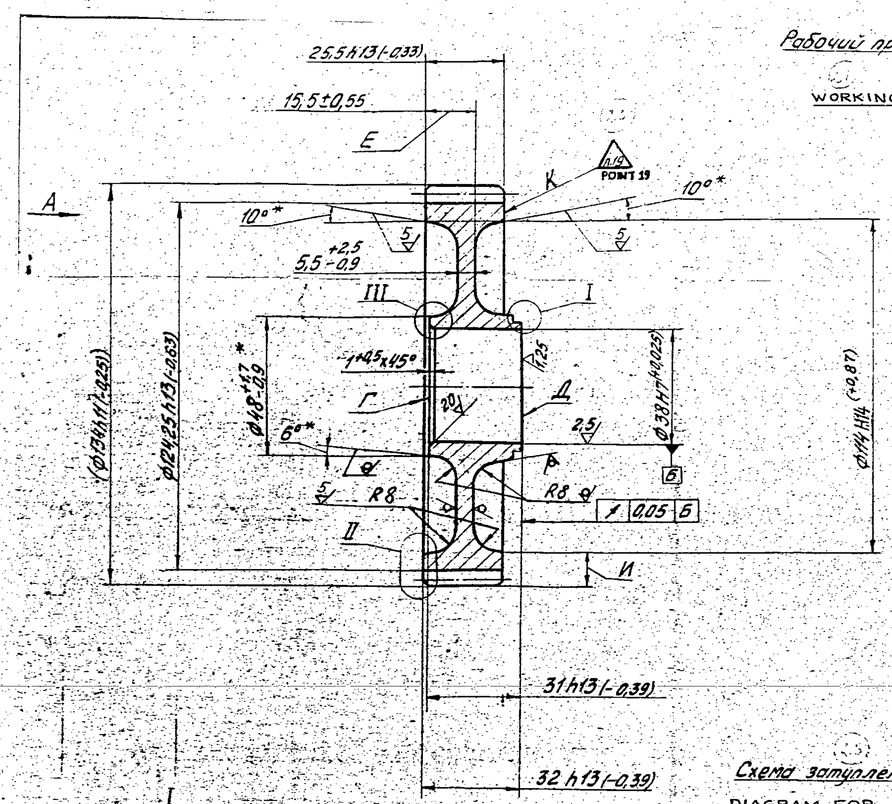

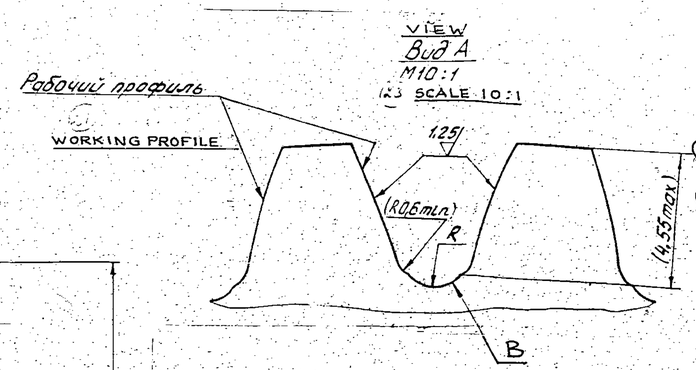

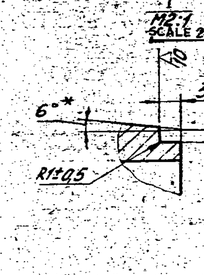

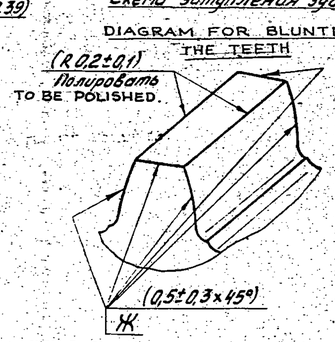

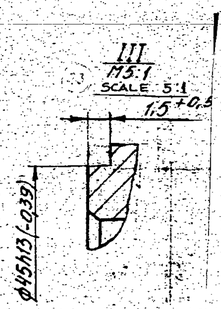

MODULE		m	2.5
NO. OF TEETH		z	52
NORMAL BASIC RACK	PROFILE ANGLE	α	20°
	ADDENDUM COEFFICIENT	h_a^*	0.8
	COEFFICIENT OF BOUNDRY HEIGHT	h_e^*	1.6
	COEFFICIENT OF CURVATURE RADIUS WITH FILLET CURVE	ρ_f	0.4
	COEFFICIENT OF BOTTOM CLEARANCE	c^*	0.35
MODIFICATION COEFFICIENT		x	0
DEGREE OF ACCURACY AS PER GOST 1643-81		–	6-7-7/
BASE TANGENT LENGTH		W	$42{,}41^{-0.07}_{-0.11}$
BASE TANGENT LENGTH TOLERANCE		F_vW	0.028
COMPOSITE ERROR DOUBLE FLANK	TOTAL FOR TOOTHED WHEEL	F_i''	0.050
	TOOTH-TO-TOOTH	f_i''	0.022
TOTAL ERROR OF DISTORTION		F_β	0.011
PITCH DIAMETER		d	130
CURVATURE RADIUS OF ACTIVE FLANK AT THE BOTTOM POINT		ρ_p	16.9
BASE DIAMETER		d_B	122.16
BASE PITCH		p_α	7.38

1. INSPECTION GROUP III AS PER TT-11.
2. SHIFT OF AXES OF DIES SHOULD NOT BE MORE THAN 0.7 mm.
3. LOCAL CAVITIES NOT EXCEEDING 1.0 mm ARE ~~NOT~~ ALLOWED ON THE NON-MACHINING SURFACE.
4. TO BE CARBURIZED ALL AROUND, EXCEPT SURFACES Б, Г AND Д: FOR TIP CIRCLE h 0.5...0.9 mm AFTER ASSEMBLY, FOR TOOTH PROFILE – h 0.6....0.9 mm AFTER ASSEMBLY AND FOR OTHER SURFACES h 0.8.....1.1 mm; HRC э ≥ 59.
5. HARDNESS OF NON-CARBURIZED SURFACES SHOULD BE HRC э 36....43.
6. RADIUS R OF TEETH SPACE IS TO BE ENSURED BY CHECKING THE DIMENSIONS OF CUTTING PROFILE OF MILLING CUTTER.
7. BEFORE CARBURIZATION, DENTS, CUTS AND TOOL MARKS ARE NOT ALLOWED ON SURFACE B; ROUGHNESS OF SURFACES IS TO BE ACCEPTED AS PER STANDARD. MACHINING OF SURFACE B IS NOT ALLOWED AFTER CARBURIZATION AND HARDENING.
8. DEPTH OF TEETH GRINDING SHOULD NOT EXCEED 0.2 mm AFTER ASSEMBLY.
9. GEAR DATA SPECIFIED IN THE TABLE IS TO BE ENSURED AFTER ASSEMBLY.
10. IF THE COMPOSITE ERROR DOUBLE FLANK IS NOT CHECKED AND FOR REMAINING GEAR DATA OF TABLE THE FOLLOWING ARE TO BE CHECKED:
    TOLERANCE ON RADIAL RUN-OUT OF GEAR RIM F_z 0.036 mm;
    DEVIATION ON BASE PITCH f_{pb} ± 0.01 mm;
    MAXIMUM DIFFERENCE IN BASE PITCHES OF SIMILAR PROFILES FOR ONE WHEEL IS 0.01 mm;
    TOLERANCE ON TOOTH PROFILE ERROR f_f 0.013 mm.
11. QUALITY OF TEETH ENGAGEMENT SHOULD BE CHECKED BY BLUEING BY RUNNING-IN WITH STANDARD GEAR. IN THIS CASE, THE IMPRINT SHOULD COVER THE TEETH FLANK IN HEIGHT – 55% MIN. AND IN LENGTH – 80% MIN. THE IMPRINT SHOULD MEET THE REQUIREMENTS OF INSTRUCTIONS UB-89-3Д AFTER ASSEMBLY.
12. DIMENSIONS GIVEN IN BRACKETS SHOULD BE OBTAINED AFTER ASSEMBLY.
13. (D) TOLERANCE ON DIMENSION E IS 0.5 mm AND DIMENSION И IS 1 mm FOR ONE YEAR.
14. CHAMFERS Ж ARE TO BE MACHINED BEFORE CARBURIZATION AND POLISHED ALONG THE ENTIRE PROFILE OF TOOTH; FINISHING AFTER CARBURIZATION IS ALLOWED.
15. BURNS ON THE GROUND SURFACE OF TEETH PROFILE ARE NOT ALLOWED.
16. COMPONENT SHOULD BE CHECKED ON MAGNETIC FIELD FLAW DETECTOR AND ACCEPTED ACCORDING TO TT UB-47.
17. ——
18. (D) *DIMENSIONS ARE TO BE ENSURED BY TOOL.
19. (D) TO BE STAMPED BY ELECTROCHEMICAL METHOD AS PER PM-32.

PILOT SAMPLE SHOULD BE APPROVED BY A.H.S.P BEFORE BULK PRODUCTION.

EST. MASS	TO BE STAMPED OR MARKED WHERE INDICATED THUS ‖ LETTERS)
1.2 Kg	

ALL SHARP EDGES AND CORNERS TO BE REMOVED UNLESS OTHERWISE STATED MACHINED CORNERS TO HAVE R OUTSIDE R INSIDE EQUIVALENT CHAMFERS ARE PERMISSIBLE.

ISSUE	DATE	NATURE OF AMENDMENTS

DRN		MATERIAL:- STEEL 12X2H4A SELECT C=0.11.....0.15 GOST 4543-71 FORGING
CHD		USED ON:- CB3338-409
TCD		
APPD		CONTROLLERATE OF QUALITY ASSURANCE (HEAVY VEHICLES) AVADI
DATE	10-4-95	
SCALE	1:1	
DIMENSIONS IN mm. TOLERANCE ON DIMNS UNLESS OTHERWISE STATED IS 2102-69.		TITLE: IDLER GEAR
ALL THREADS TO CONFORM TO		D S CAT NUMBER
		DRAWING NUMBER 3338-438-2

ALTERNATIVE TO 3338-438

SIZE A1

DRAWING NUMBER
3338-450

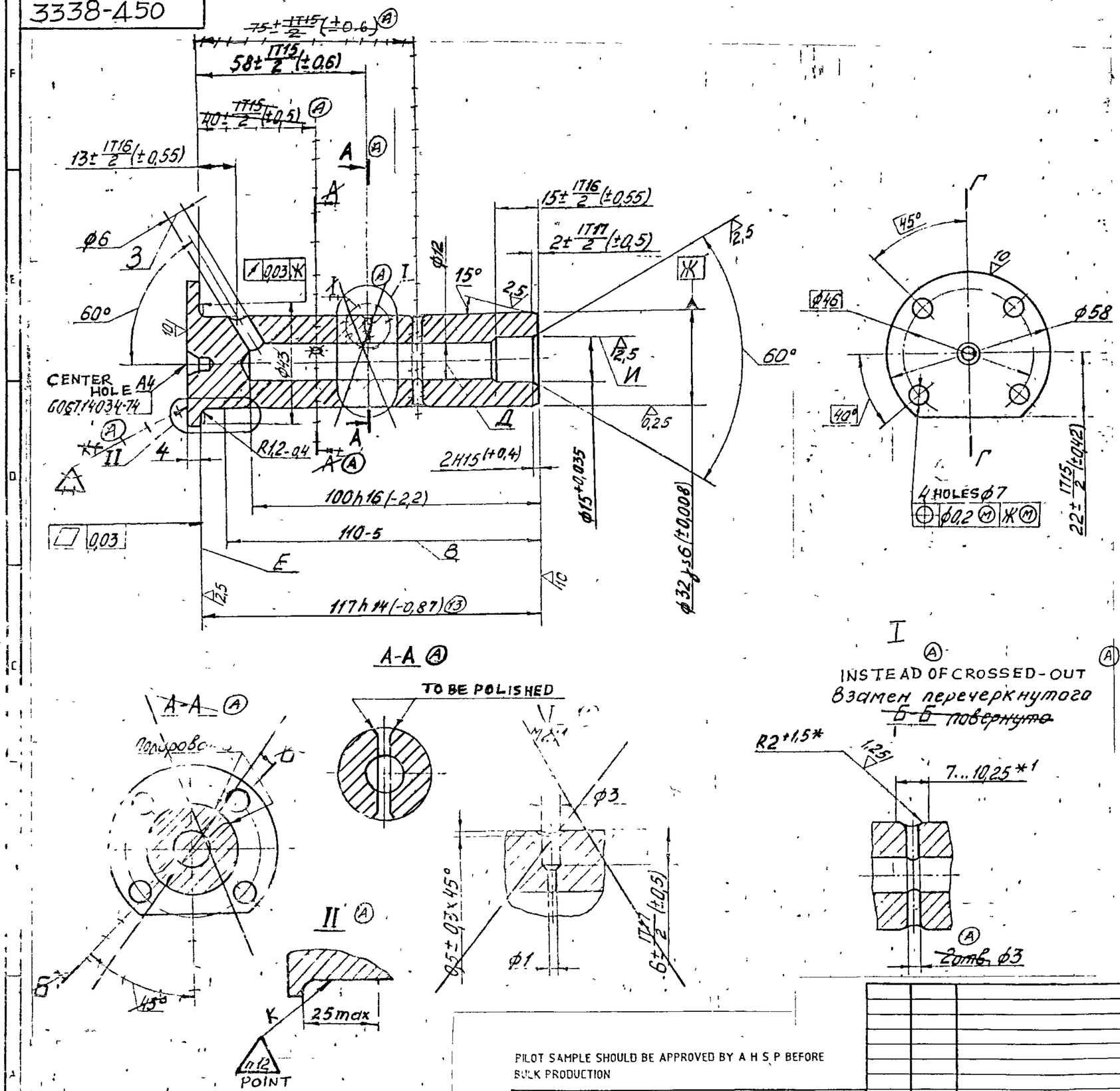

NOTE :-

1. INSPECTION GROUP III AS PER TT-11.
2. SURFACE Ж OVER A LENGTH OF B IS TO BE CARBURIZED h 0.7..... 1.1mm, HRC$_3$ ≥ 59 CARBURIZING OF HOLES, EXCEPT THE CENTRE CHAMFERS IS ALLOWED.
3. HARDNESS OF NON-CARBURIZED SURFACES IS HRC$_3$ 28 ... 42.
4. UNSPECIFIED TOLERANCES ON DIMENSIONS HOLES – AS PER H 14, SHAFTS – AS PER h 14.
5. SHIFT OF AXIS OF HOLE '3' RELATIVE TO THE PLANE Г-Г SHOULD NOT EXCEED 0.4 mm.
6. DIMENSION A MAY BE DECREASED TO 11.8mm
7. COATING: Zn 3, CHROMATIZING AS PER UA-749-88 EXCEPT THE SURFACES E, Ж AND И; ABSENCE OF COATING IN THE HOLES AND ON THE CENTRE CHAMFERS IS ALLOWED
8. IN TROPICALISED MAKE THE COATING IS Cd 9, CHROMATIZING AS PER UA-569-84, EXCEPT SURFACES E, Ж AND И WITH SUBSEQUENT REMOVAL OF HYDROGEN EMBRITTLEMENT.
9. COMPONENT SHOULD BE CHECKED ON MAGNETIC FIELD FLAW DETECTOR AND ACCEPTED ACCORDING TO TT UB-17.
10*. DIMENSION IS TO BE ENSURED BY TOOL.
11*. DIMENSION FOR REFERENCE.
12. TO BE STAMPED BY ELECTRO CHEMICAL METHOD AS PER PM-32

PILOT SAMPLE SHOULD BE APPROVED BY A H S P BEFORE BULK PRODUCTION

EST WT	TO BE STAMPED OR MARKED WHERE INDICATED THUS (LETTERS)
0,69 kg	

ALL SHARP EDGES AND CORNERS TO BE REMOVED UNLESS OTHERWISE STATED MACHINED CORNERS TO HAVE R OUT-SIDE R INSIDE. EQUIVALENT CHAMFERS ARE PERMISSIBLE

ISSUE	DATE	NATURE OF AMENDMENTS
A	27-6-94	AUTHY BK NO 86-414

DRN	
CHD	
TCD	
APPD	
DATE	4-7-94
SCALE –	1:1
DIMENSIONS IN mm	
TOLERANCE ON DIMNS UNLESS OTHERWISE STATED IS 2102-69	
ALL THREADS TO CONFORM TO	

MATERIAL -STEEL 12XH3A GOST 4543-71 FORGING

USED ON СБ 3338-414

CONTROLLERATE OF QUALITY ASSURANCE (HEAVY VEHICLES) AVADI

TITLE
GEAR UNIT AXLE

D S CAT NUMBER

DRAWING NUMBER 3338-450

SIZE A2

3338-452

DRAWING NUMBER
3338-452

Rz80/ (√)

ЕСКД

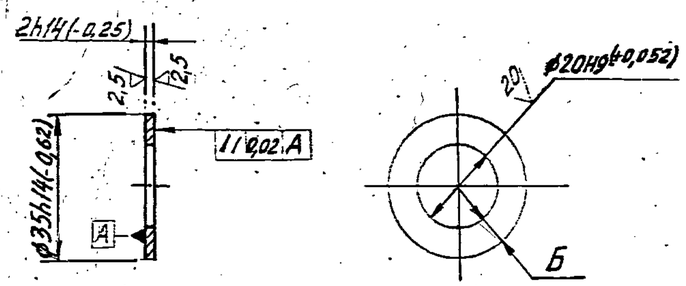

1. TOLERANCE ON DIMENSION Б SHOULD BE MAXIMUM 0,2mm WITHIN ONE COMPONENT.
2. COATING : Zn 9 , CHROMATIZING .
3. FINAL ACCEPTANCE MARK SHOULD BE PUT ON TAG WITH SUBSEQUENT SEALING OF BATCH OF ACCEPTED COMPONENTS .

1. Допуск размера Б в пределах одной детали не более 0,2 мм.
2. Покрытие Ц.9.х.р.
3. Клеймить окончательную приемку на бирке с последующим опломбированием партии принятых деталей.

(6A) EQUIVALENT MATERIAL
STEEL 080 M40 (EN8) TO BS : 970 OR
45 CB TO IS 1570

DRG. INDIANISED BASED ON RUSSIAN ORIGINAL ISSUE No: 6 (BK 83-166).

DRN		MATERIAL:- STEEL 45 GOST 1050-74 STAMPING	USED ON CE 3338-405-4
CHD			
TCD			
APPD			
DATE	22-6-88	CONTROLLERATE OF QUALITY ASSURANCE(HEAVY VEHICLES) AVADI	
SCALE:- 1:1			
DIMENSIONS IN mm TOLERANCE ON DIMNS UNLESS OTHERWISE STATED IS:2102-69		TITLE WASHER	
ALL THREADS TO CONFORM TO		D S CAT NUMBER	DRAWING NUMBER 3338-452

PILOT SAMPLE SHOULD BE APPROVED BY A H S P BEFORE BULK PRODUCTION

SL. WT. 0,010 Kg.

TO BE STAMPED OR MARKED WHERE INDICATED THUS # (LETTERS)

ALL SHARP EDGES AND CORNERS TO BE REMOVED UNLESS OTHERWISE STATED MACHINED CORNERS TO HAVE R OUT SEE NOTE EQUIVALENT CHAMFERS ARE PERMISSIBLE

ISSUE	DATE	NATURE OF AMENDMENTS
6A	10-7-10	4-16 ALT. COMM. MTg. MINUTES POINT No 7 DT. 26-10-09
6		BK 83-166

A-9 / 86

SIZE A3

DRAWING NUMBER
3338-462-1

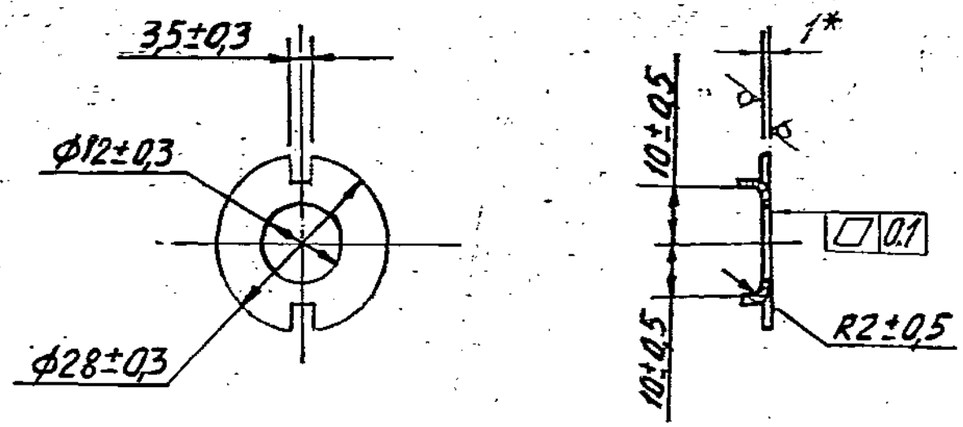

1. CRACKS, DENTS AND BURRS ARE NOT ALLOWED.

2. COATING : Zn 6, CHROMATIZING AS PER UA-483-82. WITH ELIMINATION OF HYDROGEN EMBRITTLEMENT.

3. * DIMENSION FOR REFERENCE.

(A) 4. IN TROPICALIZED MAKE COATING IS Cdq, Cr AS PER UA-569-84, WITH REMOVAL OF HYDROGEN EMBRITTLEMENT.

1 Трещины, вмятины и заусенцы не допускаются.

2. Покрытие Ц6.хр по УА-483-82 с удалением водородной хрупкости.

3.* Размер для справок.

EXPLANATORY NOTE:-

MATERIAL QUOTED:- SHEET A1 GOST 19904-74
5 - II - Г - 10 GOST 16523-70

COLD ROLLED SHEET STEEL THICKNESS 1·0 mm TO GOST 19904-74.
A = HIGH ACCURACY ; 5 = CATAGORY ; II = GROUP OF SURFACE FINISH QUALITY
Г = DEEP DRAWN ; 10 = GRADE OF STEEL AS PER GOST 1050-74

CHEMICAL COMPOSITION:- AS PER GOST 1050-74.

CONTENT OF ELEMENTS %							
C	Si	Mn	C	S	P	Cu	Ni
			MAXIMUM				
0·07-0·14	0·17-0·37	0·35-0·65	0·15	0·040	0·035	0·25	0·25

MECHANICAL PROPERTIES:- AS PER GOST 16523-70

TENSILE STRENGTH = 28-40 kgf/mm².

RELATIVE ELONGATION % = 24 (MIN). EQUIVALENT MATERIAL (B) Gr. D IS:513-1994.

DRG. INDIANISED BASED ON RUSSION ORIGINAL ISSUE NO. 5 (DK-02-252)

PILOT SAMPLE SHOULD BE APPROVED BY A H S P BEFORE BULK PRODUCTION

EST. WT. 0,003 Kg.

TO BE STAMPED OR MARKED WHERE INDICATED THUS # (LETTERS)

ALL SHARP EDGES AND CORNERS TO BE REMOVED UNLESS OTHERWISE STATED MACHINED CORNERS TO HAVE R OUT SIDE D NOTE EQUIVALENT CHAMFERS ARE PERMISSIBLE

ISSUE	DATE	NATURE OF AMENDMENTS
B	28.04.10	6th Alt.Comm.Mt.Minutes Pt.No.2 Dt.26.10.09
A	18-11-94	AUTHY :- NOTN. No. 86-190
5		BK 82-252

DRN	
CHD	
TCD	
APPD	
DATE	22-8-88
SCALE:- 1:1	
DIMENSIONS IN mm.	
TOLERANCE ON DIMNS UNLESS OTHERWISE STATED IS:2102-69	
ALL THREADS TO CONFORM TO	

MATERIAL:- SHEET A1 GOST 19904-74 5-II-Г-10 GOST 16523-70

USED ON CG 3336-405-4

CONTROLLERATE OF QUALITY ASSURANCE(HEAVY VEHICLES) AVADI

TITLE LOCK WASHER 12

D S CAT NUMBER

DRAWING NUMBER 3338-462-1

A-9 / 94

SIZE A3

3338-466

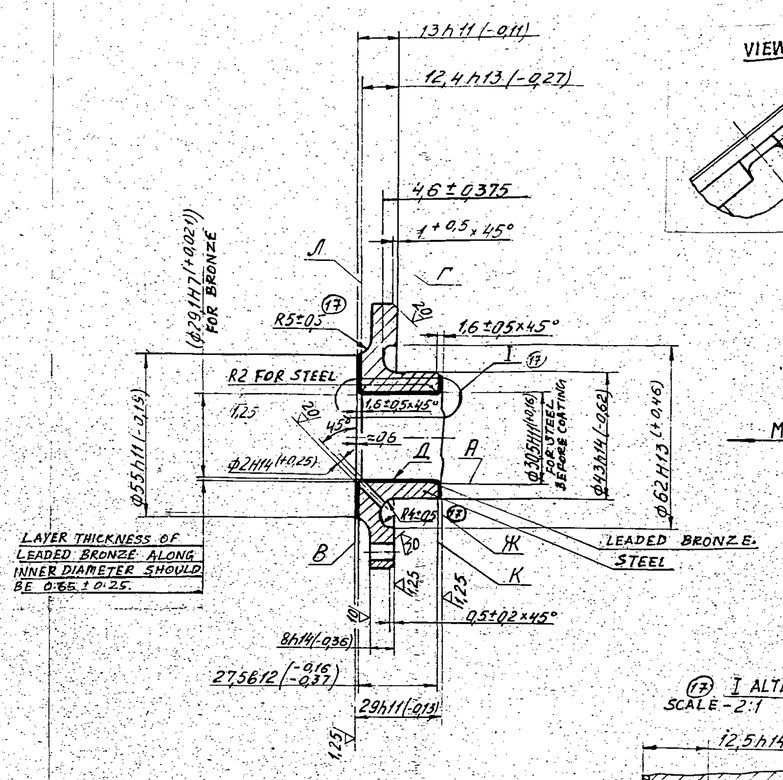

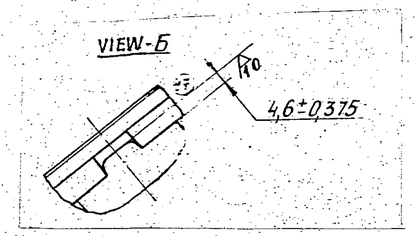

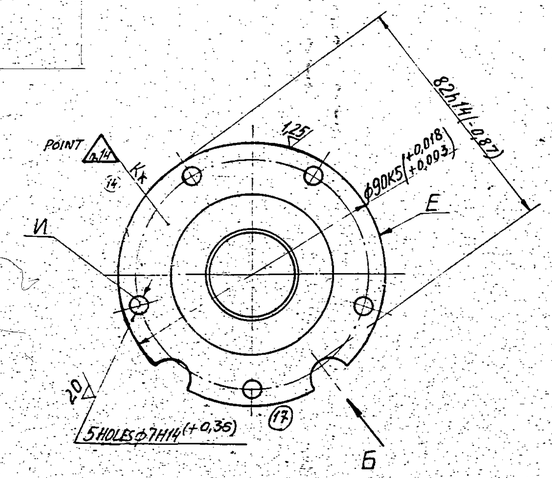

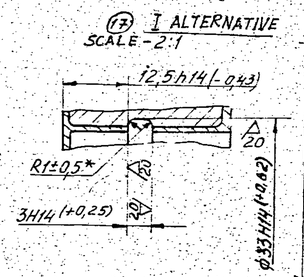

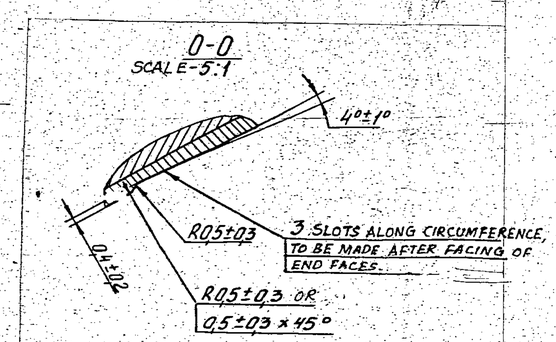

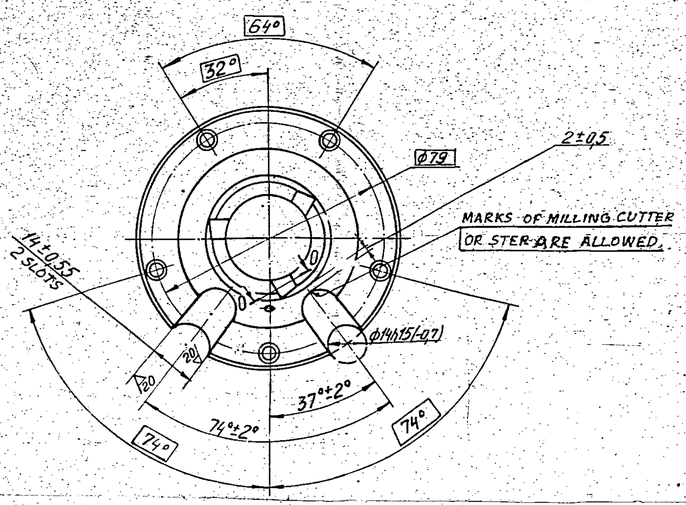

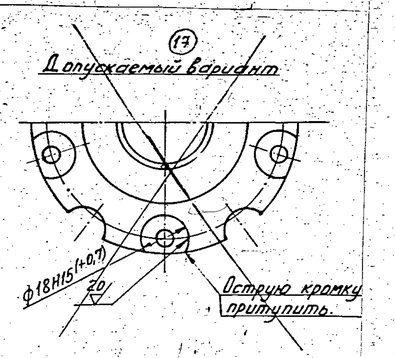

1. REQUIREMENTS FOR MATERIAL AND COATING: LEADED BRONZE AS PER TTM 43-87.
2. RECOATING OF BEARING BY LEADED BRONZE WITH PERMISSIBLE DEVIATION FOR COATING ALONG DIAMETER IS ALLOWED UPTO 1.5mm AND ALONG END FACES UPTO 0.3mm ABOVE DIMENSIONS SPECIFIED IN THE DRAWING.
3. RUN-OUT OF SURFACE 'E' RELATIVE TO SURFACE 'A' SHOULD NOT EXCEED 0.05mm (BEFORE COATING LEADED BRONZE).
4. NON-SQUARENESS OF END FACES 'Л' AND 'K' TO SURFACE 'A' ON EDGE POINTS OF DIAMETER SHOULD NOT EXCEED 0.1mm (BEFORE COATING LEADED BRONZE).
5. NON-SQUARENESS OF END FACE 'Г' TO SURFACE 'K' ON END POINTS OF DIAMETER SHOULD NOT EXCEED 0.015mm.
6. NON-SQUARENESS OF END FACES 'B' AND 'Ж' TO SURFACE 'Д' ON END POINTS OF DIAMETER SHOULD NOT EXCEED 0.02mm.
7. —
8. EXTERNAL SURFACES OF BRONZE 'Д', 'Ж' AND 'B' SHOULD BE COATED WITH LEAD LAYER OF THICKNESS 0.002 TO 0.005mm.
9. LEAD COATING SHOULD BE CARRIED OUT AFTER FINAL MACHINING AND CHECKING IN ASSEMBLY.
10. COATING BY LEAD OF OTHER SURFACES EXCLUDING SURFACES 'Г' AND 'E' ARE ALLOWED.
11. END FACE 'Г' SHOULD BE CHECKED BY BLUEING, THE IMPRINT SHOULD COVER NOT LESS THAN 60% OF THE SURFACE.
12. SHIFT OF AXES OF HOLE 'И' FROM NOMINAL POSITION SHOULD NOT EXCEED 0.2mm, DATUM SURFACE 'E' (M.M.C).
13. SHARP EDGES ARE TO BE BLUNTED.
14. TO BE STAMPED BY ETCHING OR BY ELECTROCHEMICAL METHOD.
15. ALTERNATE MATERIAL: STEEL 15, GOST 1050-74. Бр С30 GOST 493-79.
16. DIMENSIONS IN BRACKET - AFTER ASSEMBLY.
17. * DIMENSIONS ARE TO BE ENSURED BY TOOL.

~~EXPLANATORY NOTE~~

~~MATERI~~

PILOT SAMPLE SHOULD BE APPROVED BY A H S P BEFORE BULK PRODUCTION.

EST. WT. 0.540 Kg	TO BE STAMPED OR MARKED WHERE INDICATED THUS # LETTERS 1

ALL SHARP EDGES AND CORNERS TO BE REMOVED [illegible] OTERWISE STATED MACHIN[illegible] CORNERS TO HAVE R [illegible] SIDE R. INSIDE EQUIVAL[illegible] CHAM[illegible] ARE PERMISSIBLE.

ISSUE	DATE	NATURE OF AMENDMENTS
B	27-4-96	AUTHY. NOTU. BK-87-69, BK. E4-2221DK.82-321

DRN	
CHD	
TCD	
APPD	
DATE	11-5-96
SCALE	1:1
DIMENSIONS IN mm	
TOLERANCE ON DIMNS UNLESS OTHERWISE STATED IS 2102 - 69	
ALL THREADS TO CONFORM TO	

MATERIAL: STEEL 15, GOST 1050-74. Бр. OCT-22 OST 190054-72. FORGING

USED ON: СБ 3338-403-2

CONTROLLERATE OF QUALITY ASSURANCE (HEAVY VEHICLES) AVADI

TITLE: BEARING

D S CAT NUMBER

DRAWING NUMBER 3338-466

DRG. INDIANISED VIDE BK. NO.

3338-473

ЕСКД

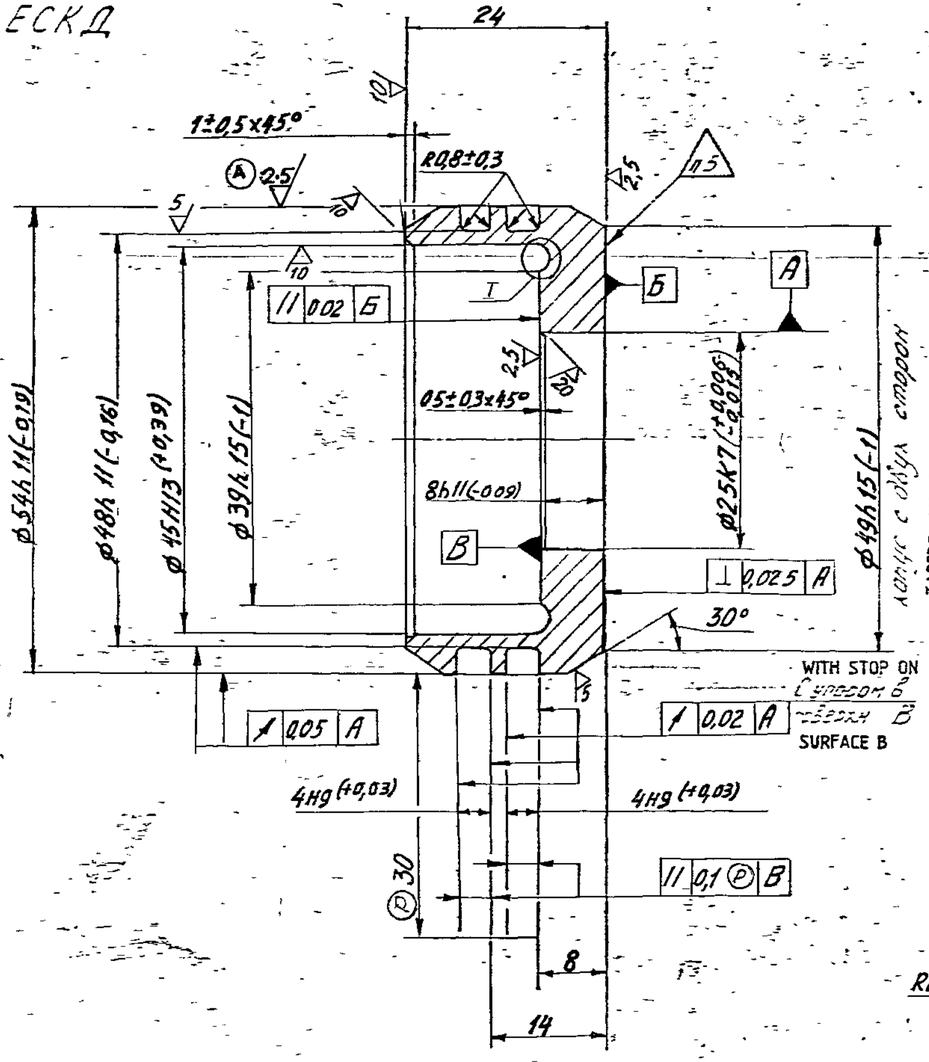

EXPLANATORY NOTE -

MATERIAL QUOTED - STEEL 65Г GOST 14959-79 STAMPING

CHEMICAL COMPOSITION:- %

CONTENT OF ELEMENTS							
C	Si	Mn	Cr	S	P	N	Cu
			MAXIMUM				
0·62-0·70	0·17-0·37	0·90-1·20	0·25	0·040	0·035	0·10	0·20

MECHANICAL PROPERTIES:-

YIELD POINT kgf/mm² (min) = 44

ULTIMATE TENSILE STRENGTH kgf/mm² (min) = 75

% ELONGATION (min) = 9

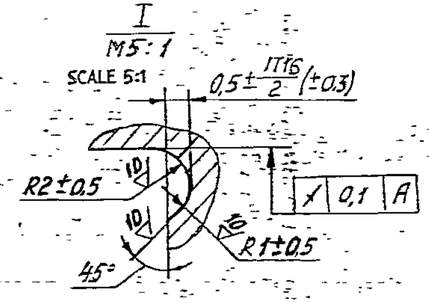

TECHNICAL REQUIREMENTS - RUSSIAN

1. Группа контроля III по ТТ-11.
2. HRCэ 35...41.
3. Неуказанные предельные отклонения размеров - по h14.
4. Покрытие Хим. Окс. пр.
5. Клеймить электрографом на диаметре не менее 42 мм.

TECHNICAL REQUIREMENTS - TRANSLATED

1. Inspection Group III as per TT-11
2. HRCэ 35.....41
3. Unspecified limit deviations of dimensions as per h14.
4. COATING - Chemical oxidizing, oil finishing
5. Marking/punching by electrographic method at diameter not less than 42mm.

PILOT SAMPLE SHOULD BE APPROVED BY A H S P BEFORE BULK PRODUCTION

		EST MASS 0·115 Kg	TO BE STAMPED OR MARKED WHERE INDICATED THUS = LETTERS;
A 7295	AUTHY BK 87-192	ALL SHARP EDGES AND CORNERS TO BE REMOVED UNLESS OTHERWISE STATED MACHINED CORNERS TO HAVE R OUTSIDE P INSIDE EQUIVALENT CHAMFERS ARE PERMISSIBLE.	
ISSUE DATE	NATURE OF AMENDMENTS	MATERIAL - STEEL 65Г GOST 14959-79	USED ON - 68 3338-405-4
DRN	SCALE:- 2 1		
CHD	DIMENSIONS IN mm		
TCD	TOLERANCE ON DIMNS UNLESS OTHERWISE STATED	CONTROLLERATE OF INSPECTION (HEAVY VEHICLES) AVADI	
APPD		TITLE:- OIL SEALING BUSH	
DATE 12-7-88	ALL THREADS CONFORM TO	D S CAT NUMBER	DRAWING NUMBER 3338-473

3 Замена 85-287 ин
Внес изм. Подп. Дата

DRAWING NUMBER
3338-474

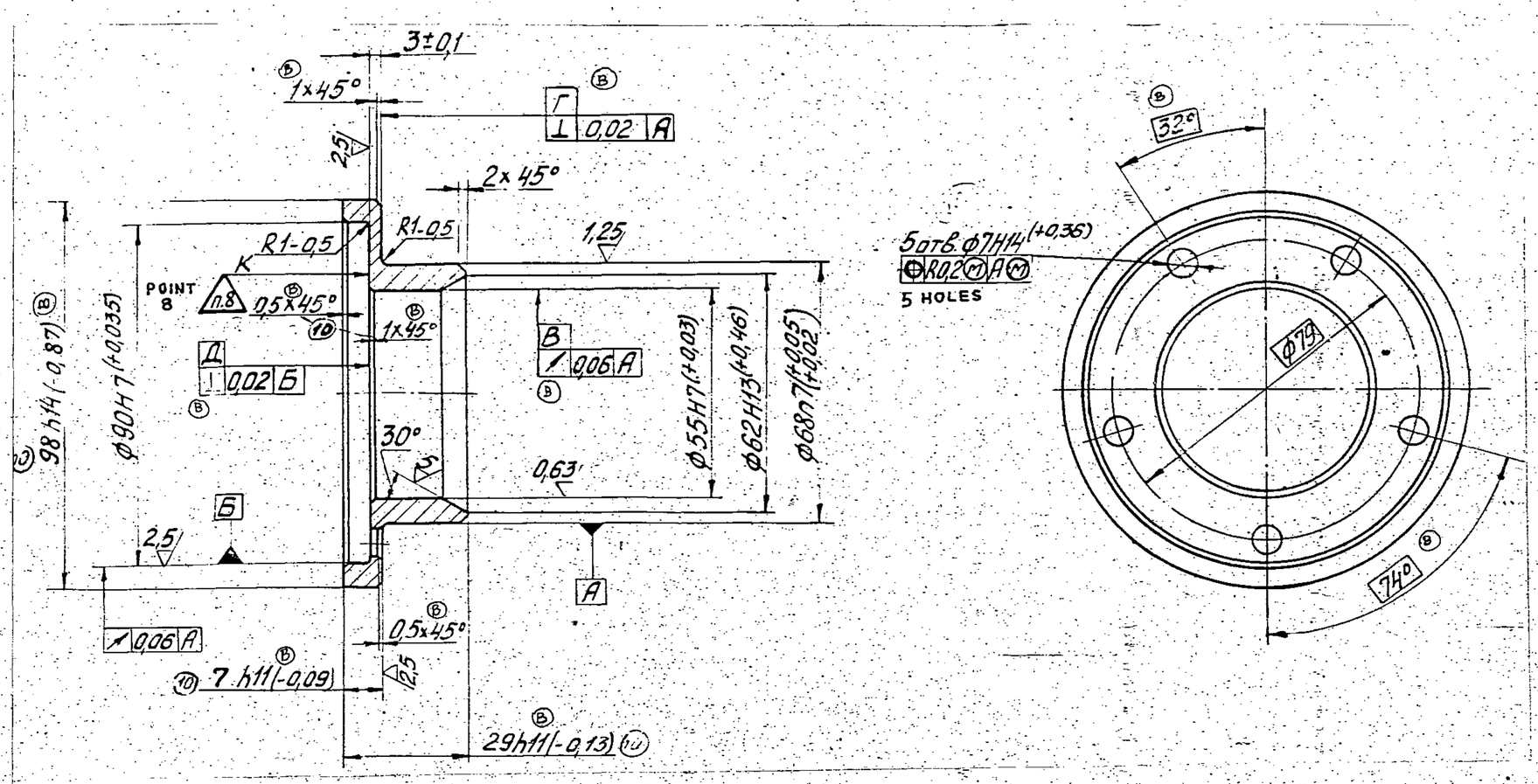

1. INSPECTION GROUP III AS PER TT-11.
2. SURFACE B SHOULD BE CASE HARDENED h 0.7 TO 1.1 mm; HRC$_э$ ≥ 57 TO BE CABONISED ALL AROUND.
3. HRC$_э$ 28 TO 42 FOR NON-CASE HARDENED SURFACES. RANDOM CHECKING FROM THE BATCH IS ALLOWED.
4. DEVIATION FROM FLATNESS OF SURFACE SHOULD BE CHECKED "BY BLUEING". BLUEING IMPRINT ON SURFACE Г – MIN 80 % ON SURFACE Д – 70 % MIN; BETWEEN HOLES ABSENCE OF BLUE IS ALLOWED.
5. TOLERANCE ON OVALITY OF SURFACE B SHOULD BE 0.005 mm SURFACES A – 0.01 mm (SEMI-DIFFERENCE OF DIAMETERS)
6. COMPONENT SHOULD BE CHECKED ON MAGNETIC FIELD FLAW DETECTOR AS PER TT UB-17 EDITION-6
7. COATING: CHEMICAL OXIDATION AND OIL FINISHING.
8. (B) TO BE STAMPED BY ELECTRO CHEMICAL METHOD.
9. (B) ALTERNATE MATERIAL: STEEL 12 X H 3A GOST 4543-71 FORGING.

PILOT SAMPLE SHOULD BE APPROVED BY A H S P BEFORE BULK PRODUCTION.

EST. WT.	TO BE STAMPED OR MARKED WHERE INDICATED THUS # (LETTERS)
0.385	

ALL SHARP EDGES AND CORNERS TO BE REMOVED UNLESS OTHERWISE STATED MACHINED CORNERS TO HAVE R OUT-SIDE R INSIDE EQUIVALENT CHAMFERS ARE PERMISSIBLE.

ISSUE	DATE	NATURE OF AMENDMENTS
B	10-5-96	AUTHY B.K.-87-69

DRN	
CHD	
TCD	Alice J.
APPD	
DATE	10-5-96
SCALE :-	1 : 1
DIMENSIONS IN mm	
TOLERANCE ON DIMNS UNLESS OTHERWISE STATED IS 2102 – 69	
ALL THREADS TO CONFORM TO	

MATERIAL :- STEEL 12 X H 3A TY 14-1-381-72 FORGING

USED ON :- CB 3338-403-2

CONTROLLERATE OF QUALITY ASSURANCE (HEAVY VEHICLES) A V A D I

TITLE : HOLDER

D S CAT NUMBER

DRAWING NUMBER 3338-474

SIZE A2

DRAWING NUMBER
3338-475

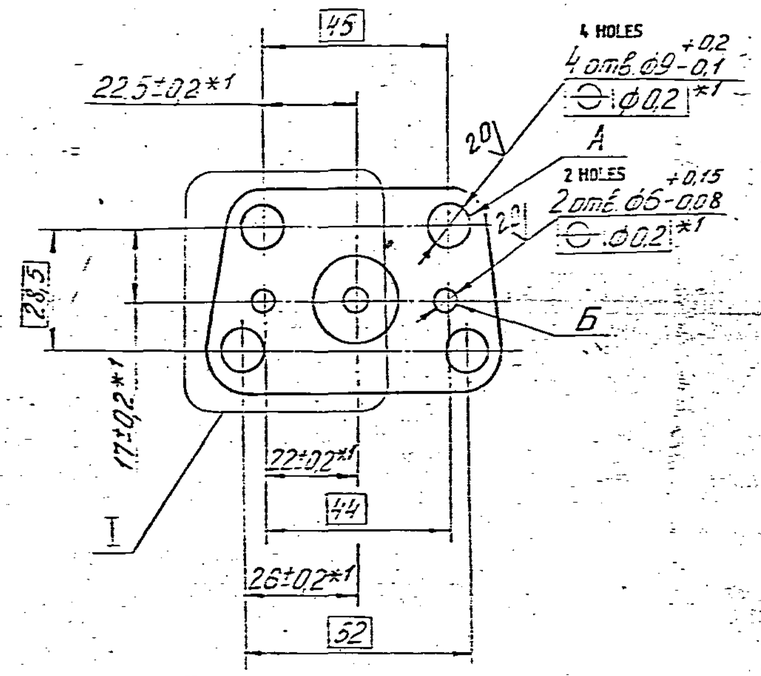

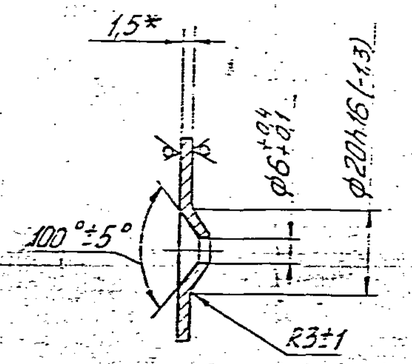

1. Заменитель материала сталь 10 ГОСТ 1050-74.
2. Поверхности детали не должны иметь рванин, трещин и дефектов металлургического характера.
3. Неуказанные предельные отклонения размеров ±0,3 мм.
4. Отверстия А и Б допускается выполнять в сб. 3338-416.
5. * Размер для справок.
6. *1 Обеспечить инструментом.

1. Alternate Material: Steel 10 GOST 1050-74.
2. Components surfaces should be free from fissurs, cracks, and metallurgical defects.
3. Unspecified tolerances of dimensions ± 0.3 mm.
4. Holes A and Б may be made on СБ 3338-416.
5. * Dimension for reference.
6. *1 To be ensured by tool.

EXPLANATORY NOTE:

Material Quoted: sheet A1-5 GOST 19904-74
II-10КП GOST 16523-70
colled rolled sheet, thickness 1.5 mm as per GOST 19904-74
A = High accuracy
II = Space finish (High finish)
10КП = Grade of steel (Rimmed) as per GOST 1050-74
Chemical composion as per GOST 1050-74

CONTENTS OF ELEMENTS %							
C	Si	Mn.	C	P	S	Cu	Ni
0.07-0.14	0.07 max	0.25-0.50	MAXIMUM 0.15	0.035	0.040	0.25	0.25

Mechanical Properties as per GOST 16523-70
Tensile strength - 28-40 kgf/mm²
Relative elongation = 24 % (min)

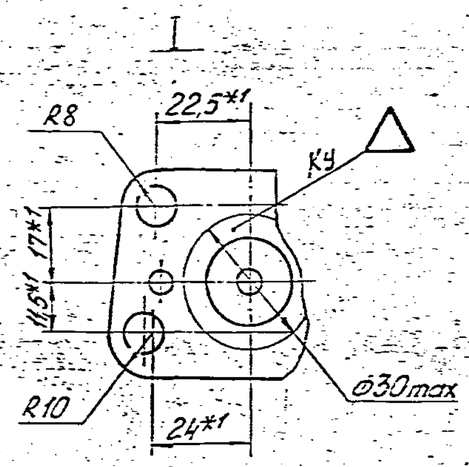

PILOT SAMPLE SHOULD BE APPROVED BY A H S P BEFORE BULK PRODUCTION.

EST. WT. 0,028 Kg

TO BE STAMPED OR MARKED WHERE INDICATED THUS # (= LETTERS)

ALL SHARP EDGES AND CORNERS TO BE REMOVED UNLESS OTHERWISE STATED MACHINED CORNERS TO HAVE R OUTSIDE R INSIDE EQUIVALENT CHAMFERS ARE PERMISSIBLE.

ISSUE	DATE	NATURE OF AMENDMENTS

DRN
CHD
TCD
APPD
DATE 22-8-88
SCALE 1:1
DIMENSIONS IN mm.
TOLERANCE ON DIMNS UNLESS OTHERWISE STATED IS 2102-69
ALL THREADS TO CONFORM TO

MATERIAL :- Sheet A 1.5 GOST 19904-74 / II-10КП GOST 16523-70
USED ON :- СБ 3338-416.
CONTROLLERATE OF QUALITY ASSURANCE (HEAVY VEHICLES) AVADI
TITLE PIPE FLANGE
D S CAT NUMBER
DRAWING NUMBER 3338-475

SIZE A2

DRG. INDIANISED BASED ON RUSSIAN ORIGINAL ISSUE No: 5 (DK 05 - 477)

3338-479 ECKA

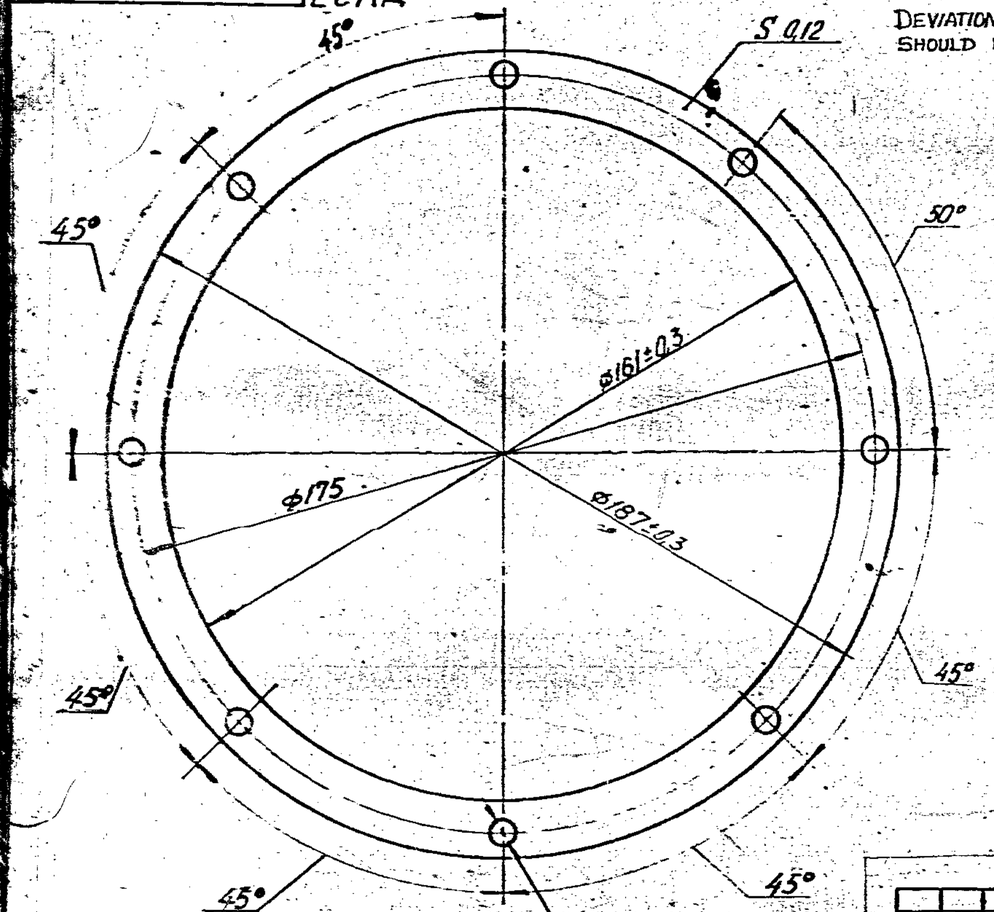

DEVIATION OF CENTRES HOLES FROM THE TRUE POSITION SHOULD NOT EXCEED 0.15mm TO ANY SIDE.

* PAPER K-120
GOST 23436-79

PILOT SAMPLE SHOULD BE APPROVED BY A H S P BEFORE BULK PRODUCTION

			EST. MASS 0.0006 Kg	TO BE STAMPED OR MARKED WHERE INDICATED THUS + (LETTERS)
ISSUE	DATE	NATURE OF AMENDMENTS	ALL SHARP EDGES AND CORNERS TO BE REMOVED UNLESS OTHERWISE STATED MACHINED CORNERS TO HAVE R OUTSIDE R INSIDE EQUIVALENT CHAMFERS ARE PERMISSIBLE	
DRN		SCALE :- 1:1	MATERIAL :- * SEE ABOVE	USED ON :- CG 3338-486-7
CHD		DIMENSIONS IN mm	CONTROLLERATE OF INSPECTION (HEAVY VEHICLES) AVADI	
TCD		TOLERANCE ON DIMS UNLESS OTHERWISE STATED	TITLE :- BRANCH PIPE GASKET	
APPD		ALL THREADS CONFORM TO	B S CAT NUMBER	DRAWING NUMBER 3338-479
DATE				

EXPLANATORY NOTE :-

MATERIAL QUOTED :- PAPER K-120 GOST 23436-79

K-120 = NORMS FOR PAPER GRADE.

PHYSICO AND TECHNOLOGICAL PARAMETERS :-

1. THICKNESS IN MICRONS = 120 ± 7
2. % COMPOSITION OF UNBLEACHED CELLULOSE AS PER STANDARDS AND TECHNICAL DOCUMENTATION = 100
3. DENSITY g/cm³ = 0.78 ± 0.05
4. BREAKING FORCE Kgf
   a) IN MACHINE DIRECTION = 13.0 (MIN)
   b) IN TRANSVERSE DIRECTION = 6.0 (MIN)
5. % ELONGATION
   a) IN MACHINE DIRECTION = 2.2 (MIN)
   b) IN TRANSVERSE DIRECTION = 6.6 (MIN)
6. AIR PERMEABILITY ml/min = 40 (MAX)
7. % ASH CONTENT = 1.0 (MAX)
8. P.H. VALUE AQUEOUS EXTRACT = 7.0 - 9.5.
9. CONDUCTIVITY OF AQUEOUS EXTRACT µs/cm
   a). WITH MODULE 1:50 = 63 (MAX).
   b). WITH MODULE 1:20 = 126 (MAX).
10. MOISTURE CONTENT % = 4 - 8.

3338 - 498

ЕСКД

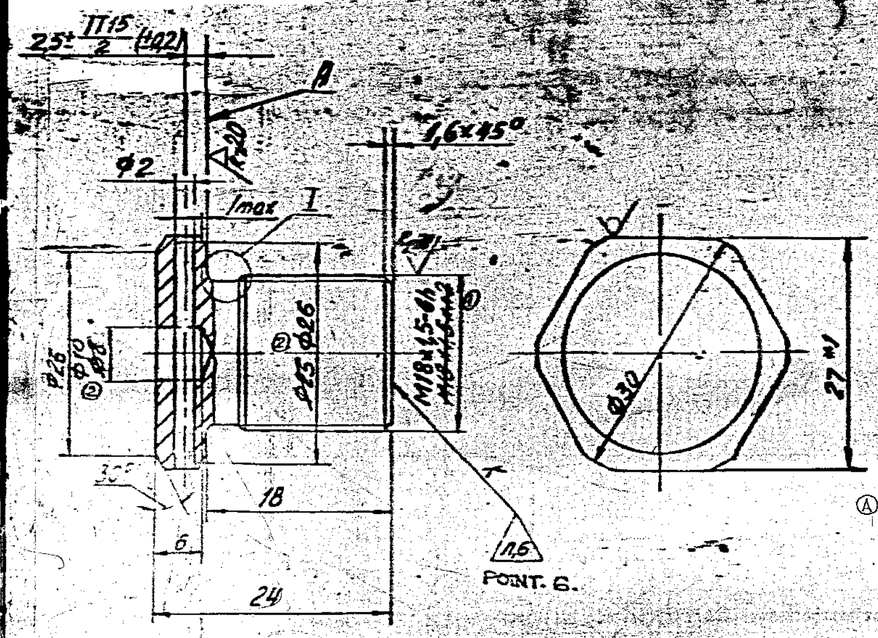

1. INSPECTION GROUP V TY-11.
2. UNSPECIFIED LINEY DEVIATIONS : OF HOLES AS PER H14, OF SHAFTS – AS PER h14, OF THE REST OF DIMENSIONS – AS PER ± IT14/2
3. END PLAY OF SURFACE A RELATIVE TO THE THREAD AXIS SHOULD NOT EXCEED 0.1 mm (ESC).
4. SURFACE OF THREAD SHOULD BE CLEAN, FREE FROM SCORES, BURRS, STRIPPED THREADS, DENTS, CORROSION TRACES AND OTHER SURFACE DEFECTS.
5. COATING : Zn 3, CHROMATIZING AS PER ОЛ –483-82.
6. TO BE PUNCHED.
7. *1 DIMENSION FOR REFERENCE.
8. *2 DIMENSIONS SHOULD BE ENSURED WITH TOOL.
9. (A) IN TROPICALIZED MAKE THE COATING IS Cd 3, Cr AS PER UA-569-84 WITH REMOVAL OF HYDROGEN EMBRITTLEMENT.

(B) ALTERNATE MATERIAL : STEEL 080 M40 (EN 8) TO BS: 970 PT-1-1983 OR 45 C8 TO IS: 1570

*2 HEXAGON BAR 27-5 GOST 8560-78 / 45 GOST 1051-73

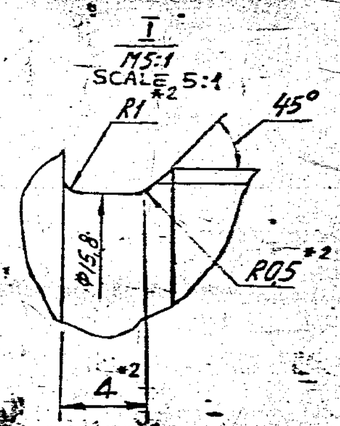

FIRST SAMPLE SHOULD BE APPROVED BY A H S P BEFORE BULK PRODUCTION

B	13/7/09	3rd. ALTN. COMM. MIN. POINT 8. DT. 27-2-09	EST. MASS 0,156 Kg	TO BE STAMPED OR MARKED WHERE INDICATED THUS ▼ (LETTERS)
A	8-2-95	AUTHY NOTN. No. B.K 86-190	ALL SHARP EDGES AND CORNERS TO BE REMOVED UNLESS OTHERWISE STATED MACHINED CORNERS TO HAVE R OUTSIDE R INSIDE EQUIVALENT CHAMFERS ARE PERMISSIBLE	
ISSUE	DATE	NATURE OF AMENDMENTS		
DRW		SCALE ► 2 : 1	MATERIAL ► * SEE ABOVE	USED ON ► CG 3338-401-10 CG 3338-402-4 CG
CHD		DIMENSIONS IN mm	CONTROLLERATE OF INSPECTION (HEAVY VEHICLES) AVADI	
TCD		TOLERANCE ON DIMS UNLESS OTHERWISE STATED	TITLE ► PLUG	
APPD			D S CAT NUMBER	DRAWING NUMBER 3338-498
DATE		ALL THREADS CONFORM TO		

EXPLANATORY NOTE :-

MATERIAL QUOTED :- HEXAGONAL BAR 27-5 GOST 8560-78 / 45 GOST 1051-73

BRIGHT STEEL HEXAGONAL FROM GRADE 45 STEEL WITH WIDTH ACCROSS FLATS 27 mm ; OF ACCURACY CLASS-5.

CHEMICAL COMPOSITION :-

CONTENT OF ELEMENTS %							
C	Si	Mn	Cr	P	S	Cu	Ni
			MAXIMUM				
0·42-0·50	0·17-0·37	0·50-0·80	0·25	0·035	0·040	0·25	0·25

MECHANICAL PROPERTIES :-

TENSILE STRENGTH	kgf/mm²	(MIN)	= 61
YIELD POINT	kgf/mm²	(MIN)	= 36
% ELONGATION		(MIN)	= 16
REDUCTION IN AREA %		(MIN)	= 40
IMPACT STRENGTH	kgf·m/cm²	(MIN)	= 5

DRAWING NUMBER
Cb. 340 - 293Cb.

ЕСКД

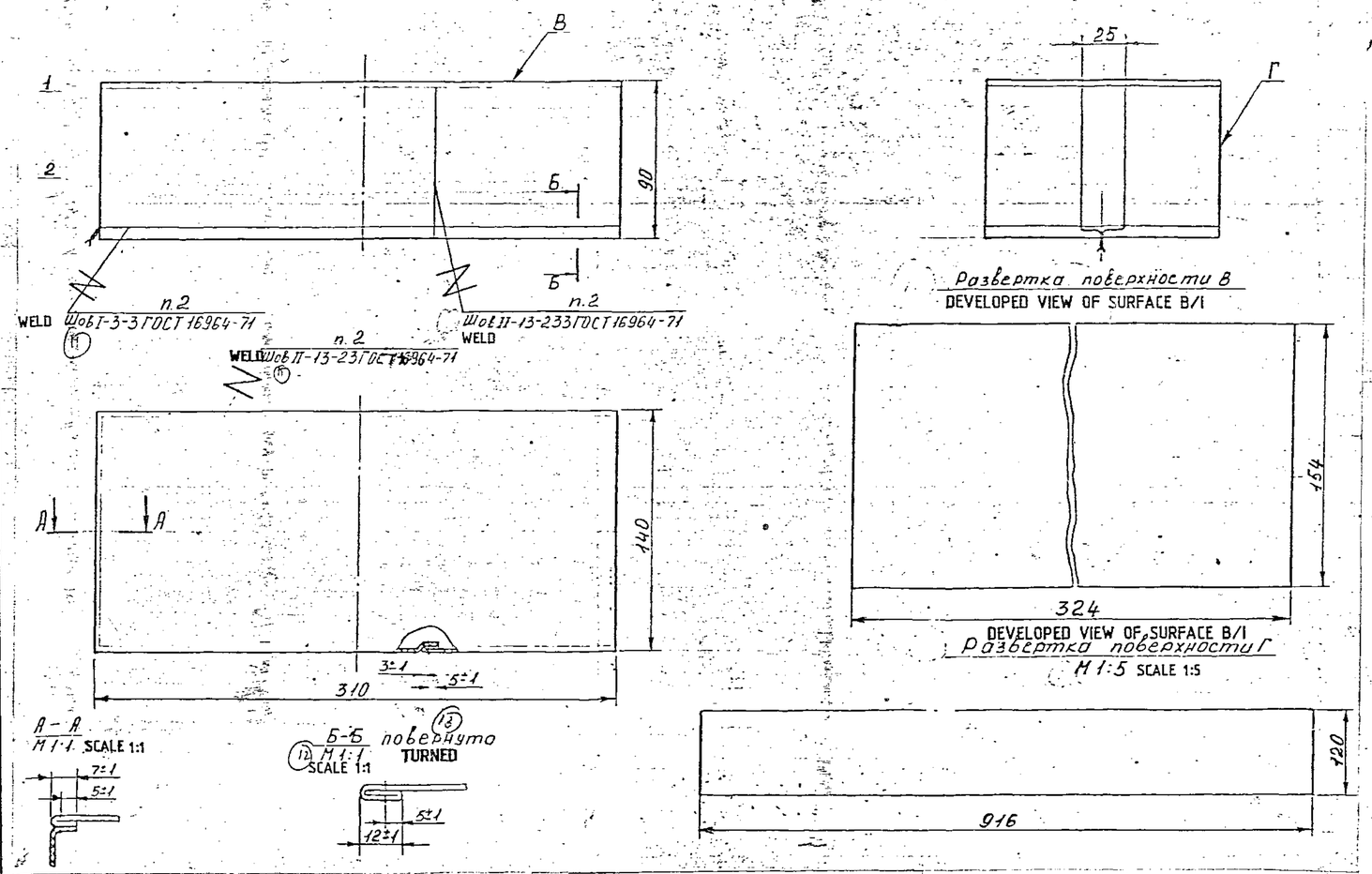

1. Заменитель материала винилискожа-Т обивочная ВО-I I сорта цвет коричневый ГОСТ 23367-78.
Допускается изготовление из парусины льняной №1 СКП окрашенной цвета хаки арт. 11104 ГОСТ 20712-75.

2. Нитки швейные х/б, особопрочные, суровые, черные №3 ГОСТ 6309-80.
3. Неуказанные предельные отклонения размеров ±3 мм.
4. После закрытия чехлом фланца корпуса нагнетателя, чехол плотно обжать и прикрутить проволокой.
5. Допускается боковую поверхность выполнять из двух частей одного цвета и материала.
6. В экспортном исполнении чехол изготавливать из одного материала и одного цвета.
7. Чехол в тропическом исполнении изготавливать из материалов со специальной пропиткой по ГОСТ 15151-69.
8. В тропическом исполнении шить нитками швейными х/б, особопрочными, глянцевыми, цвет хаки №1 ГОСТ 6309-80. Нитки должны соответствовать ГОСТ 15160-69.
9. Остальные технические требования по ГОСТ 16966-71.

1. ALTERNATE MATERIAL : VINYL FANCY LEATHER - T, UPHOLSTERING, BO-I, I QUALITY, COLOUR - BROWN , GOST 23367-78.
MAY BE MANUFACTURED FROM LINER CANVAS No. 1 CKI I PAINTED WITH KHAKI COLOUR GOST 20712-75.
2. COTTON SEWING THREAD , SUPERSTRONG, UNTREATED BLACK No. 3, GOST 6309-80.
3. UNSPECIFIED LIMIT DEVIATIONS OF DIMENSIONS ±3mm.
4. AFTER CLOSING WITH COVER OF SUPER CHARGER BODY FLANGE, THE COVER SHOULD BE TIGHTLY PRESSED AND TWISTED WITH WIRE .
5. LATERAL SURFACE SHOULD BE MADE FROM WITH TWO PARTS HAVING SAME COLOUR AND MATERIAL .
6. FOR EXPORT PURPOSE , THE COVER OF SAME COLOUR FROM SAME MATERIAL IS MANUFACTURED.
7. IN TROPICALISED CONSTRUCTION , THE COVER MANUFACTURED FROM MATERIAL WITH SPECIAL IMPREGNATION AS PER GOST 15151-69.
8. IN TROPICALISED CONSTRUCTION, SCREW WITH COTTON SEWING THREAD - SUPER STRONG, GLOSSY, KHAKI COLOUR No. 1, GOST6309-80.
TREADS SHOULD COMPLY WITH GOST 160-69.
9. THE REST OF TECHNICAL REQUIREMENTS ARE AS PER GOST 16966-71.

4	304	74-5.72	[illegible]	[illegible]
Изм	Лист	№ докум.	Подп.	Дата

PILOT SAMPLE SHOULD BE APPROVED BY A H S P BEFORE BULK PRODUCTION.

EST. WT. 0.120 Kg.

TO BE STAMPED OR MARKED WHERE INDICATED THUS # (LETTERS)

ALL SHARP EDGES AND CORNERS TO BE REMOVED UNLESS OTHERWISE STATED MACHINED CORNERS TO HAVE R OUTSIDE R INSIDE EQUIVALENT CHAMFERS ARE PERMISSIBLE.

ISSUE	DATE	NATURE OF AMENDMENTS

DRN	
CHD	
TCD	
APPD	
DATE	27-08-89
SCALE :-	1 : 2.
DIMENSIONS IN mm.	
TOLERANCE ON DIMNS UNLESS OTHERWISE STATED IS 2102-69	
ALL THREADS TO CONFORM TO	

MATERIAL :-

USED ON :-

CONTROLLERATE OF QUALITY ASSURANCE (HEAVY VEHICLES)
A V A D I

TITLE
COVER ASSY.

D S CAT NUMBER

DRAWING NUMBER
Cb 340-293Cb.

DRG. INDIANISED BASED ON RUSSIAN ORIGINAL ISSUE-A (ВМ 84-520).

SIZE A2

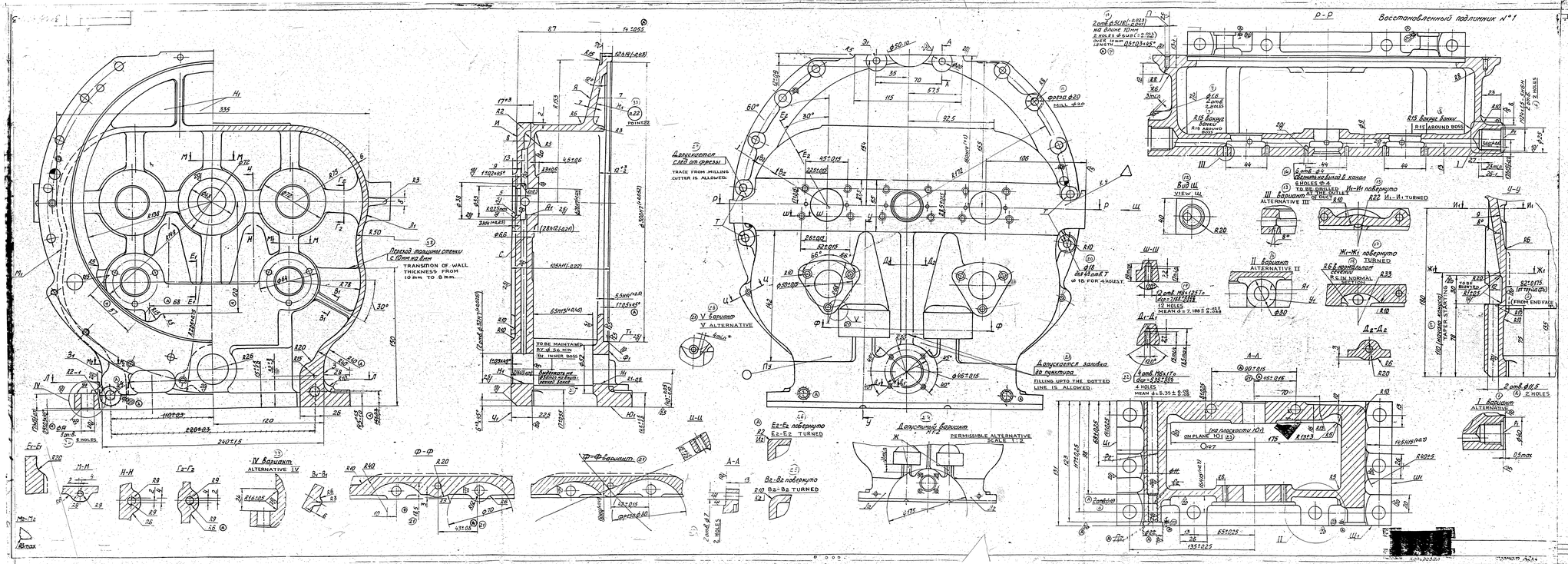
Восстановленный подшипник №1
Переход толщины стенки с 10мм на 8мм
TRANSITION OF WALL THICKNESS FROM 10 mm TO 8 mm.
Допускается след от фрезы
TRACE FROM MILLING CUTTER IS ALLOWED.
Допускается заливка до пунктира
FILLING UPTO THE DOTTED LINE IS ALLOWED.
Допустимый вариант
PERMISSIBLE ALTERNATIVE
SCALE 1:2
V вариант
V ALTERNATIVE
IV вариант
ALTERNATIVE IV
III вариант
ALTERNATIVE III
II вариант
ALTERNATIVE II
I вариант
ALTERNATIVE I
Вид Ш
VIEW Ш
Ш-Ш
Ж-Ж повернуто
Ж-Ж TURNED
И-И повернуто
И-И TURNED
Ц-Ц
Е2-Е2 повернуто
Е2-Е2 TURNED
В2-В2 повернуто
В2-В2 TURNED
Ф-Ф
Ф-Ф вариант
А-А
Р-Р
Д-Д
Д2-Д2
Е-Е
Н-Н
Г2-Г2
В1-В1
М1-М1
ON PLANE 1011
ALL SHARP EDGES AND CORNERS THAT REMAIN UNLESS OTHERWISE STATED, ARE TO BE BROKEN OUTSIDE & OUTSIDE & INSIDE, EQUIVALENT OF RADIUS ARE PERMISSIBLE
PILOT SAMPLE SHOULD BE APPROVED BY S.N.K.P. BEFORE MASS PRODUCTION.
MATERIAL
CERTIFICATE OF QUALITY ASSURANCE (HEAVY VEHICLES) A.V.S.I.
DRAWING IN MM.
TOLERANCE ON SPACE UNLESS OTHERWISE STATED
ALL THREADS / TS COMPANY TQ
DRAWN
CHD
SIGN
APPD
DATE
SCALE
DEAD Dim.
C.B. 3338-420-4
TITLE
BODY OF SUPER CHARGER
DRAWING NUMBER
3338-420-3
SHEET 8
D.S.EXT NUMBER
A
26.4.98
Вн 86-170 / Вк 87-518
Вн 88-1 / А. 89.88.175
NATURE OF AMENDMENTS
ISSUE
DATE

СБ 340-14СБ

ЕСКД

С 340-14С.

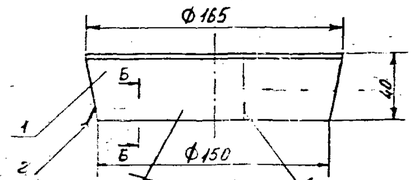

Para 2 Para 8
п.2 п.8
Шов I-3 ЗГ ОСТ 16964-71
Seam I-3-3 GOST 16964-74

Para 2 Para 8
п.2 п.8
Шов II 13-233 ОСТ 16964-71
Seam II-13-233 GOST 16964-71

Para 2 Para 8

Seam II -13-23 GOST 16964-71

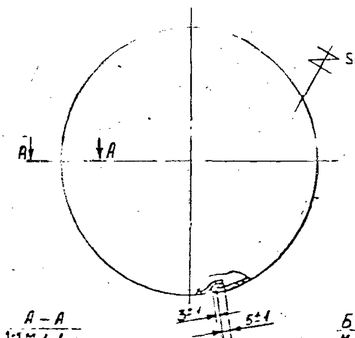

А – А
Scale 1:1 М 1:1

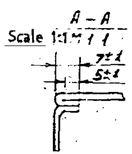

Turned
Б-Б повернуто
М 1:1

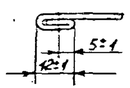

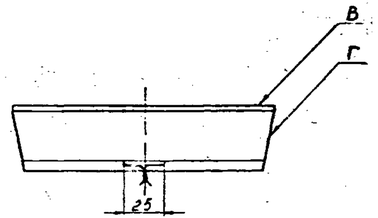

Развертка поверхности В
Surface B Devolopment

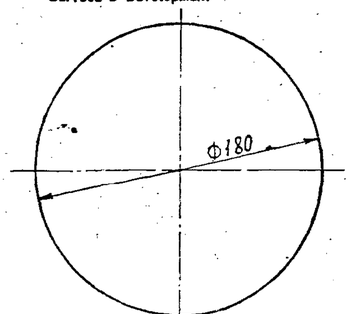

Surface Г Devolopment
Развертка поверхности Г

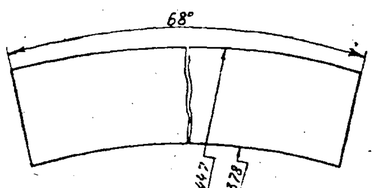

1. SUBSTITUTE FOR MATERIAL IS SEMI LINEN CANVAS NO.3 СКП В, SERIES OF ARTICLE -11220, OF KHAKI COLOUR, GOST 15530-76 OR TARPAULIN CANVAS IMPREGNATED WITH ВП О, SERIES OF ARTICLE 11241 OF KHAKI COLOUR AS PER TY 17 RSFSR 4782-74 OR TURPAULIN CANVAS ВП IMPREGNATED WITH ВПО, SERIES OF ARTICLE 11243 OF KHAKI COLOUR AS PER T У 17 RSFSR 40-9205-78. MAY BE PRODUCED FROM ARTIFICIAL UPHOLSTERY LEATHER T BO-I, FIRST GRADE GOST 23367-78 OR FANCY LEATHER WITH NON POROUS POLYVINYLCHLORIDE COATING AS PER GOST 11107-75.
2. COTTON THREADS, SUPERSTRONG, COARSE, BLACK NO.3 GOST 6309-80.
3. UNSPECIFIED LIMIT DEVIATIONS OF DIMENSIONS ARE ± 3 mm.
4. AFTER CLOSING THE EXHAUST MANIFOLD HOLE WITH CASING, SQUEEZE THE CASING ON THE MANIFOLD TIGHTLY AND FASTEN WITH WIRE.
5. SIDE SURFACE MAY BE PRODUCED FROM 2 PARTS OF THE SAME COLOUR AND MATERIAL.
6. IN EXPORT VERSION, CASINGS ARE TO BE MANUFACTURED FROM ONE KIND THE SAME MATERIAL AND SHOULD BE OF ONE COLOUR.
7. CASING IN TROPICAL VERSION SHOULD BE MANUFACTURED FROM SPECIALLY IMPREGNATED MATERIAL AS PER GOST 15151-69.
8. CASINGS TROPICAL VERSION SHOULD BE SERVED WITH COTTON, SUPER STRONG, GLOSSY THREADS OF KHAKI COLOUR NO.1, GOST 6309-80. THREADS SHOULD CORRESPOND TO GOST 15160-69.
9. OTHER TECHNICAL REQUIREMENTS ARE AS PER GOST 16966-71.

Сб 20-09-07

PILOT SAMPLE SHOULD BE APPROVED BY A H S P BEFORE BULK PRODUCTION

A-15

ISSUE	DATE	NATURE OF AMENDMENTS
DRN		SCALE :- 1:2
CHD		DIMENSIONS IN mm
TCD		TOLERANCE ON DIMNS UNLESS OTHERWISE STATED
APPD		
DATE	21/5/87	ALL THREADS CONFORM TO

EST. MASS 0.055 Kg

TO BE STAMPED OR MARKED WHERE INDICATED THUS ✚ LETTERS

ALL SHARP EDGES AND CORNERS TO BE REMOVED UNLESS OTHERWISE STATED MACHINED CORNERS TO HAVE A OUTSIDE & INSIDE EQUIVALENT CHAMFERS ARE PERMISSIBLE

MATERIAL :- —

USED ON :- СБ 3338-401-10

CONTROLLERATE OF INSPECTION (HEAVY VEHICLES) AVADI

TITLE COVER EXHAUST MANIFOLD

D S CAT NUMBER

DRAWING NUMBER СБ 340 - 14 СБ

EXPLANATORY NOTE: (For item No.2)

Material Quotec: wire К.0 1.0 GOST 792-77

Low carbon quality wire to grade К.0
К.0 = grade galvanised coating
1.0 = Diameter of the wire.

Wire is made from low carbon rolled steel wire as per GOST 1050-74.

Mechanical Properties:

Tensile strength 37 kgf/mm² (min)

No. of bends to 180° = 13 (min)

No. of twists to 360° = 20 (min)

USED ON

Cb 3338-401-10

ITEM	DRAWING NUMBER	D S CAT NUMBER	DESCRIPTION	OFF	REMARKS
	СБ 340-14 СБ		COVER EXHAUST MANIFOLD		
	& ITEM LIST				
1	N - D		SEMI-LINEN CANVAS No 2		A4x3
			DYED INTO KHAKI COLOUR		
			SERIES OF ARTICLE M205	0,055	Kg
			GOST 15530-76		
2	N - D		※ WIRE KO 1,0 GOST 792-77	600MM	
			※ Please see the mtl. Explanatory note in the Assy. Drg.		

ISSUE	DATE	NATURE OF AMENDMENTS	ISSUE	DATE	NATURE OF AMENDMENTS

DRN		CONTROLLERATE OF INSPECTION(HEAVY VEHICLES) AVADI		
CHD		TITLE: COVER EXHAUST MANIFOLD		
TCD	Narain Pvt			
APPD		SHT. No 1 OF 1	D S CAT NUMBER	ITEM LIST FOR СБ 340-14 СБ
DATE	2/5/87			

USED ON	ITEM	DRAWING NUMBER	D S CAT NUMBER	DESCRIPTION	No. OFF	REMARKS
		Cb 340 - 293 Cb		COVER ASSY.		A4 x 3
		& ITEM LIST				
	1	GOST 11107 - 75		VINYL FANCY-		
				LEATHER - T	0,120	Kg.
	2	GOST 792 - 67		WIRE KO 1,0	1000	mm

I/L INDIANISED BASED ON RUSSIAN ORIGINAL ISSUE -4 (Вн 84-52b).

ISSUE	DATE	NATURE OF AMENDMENTS	ISSUE	DATE	NATURE OF AMENDMENTS

DRN.		CONTROLLERATE OF QUALITY ASSURANCE (HEAVY VEHICLES) AVADI.		
CHD		TITLE: COVER ASSY.		
TCD.	Ramchandran			
APPD		SHT. No. 1 OF 1	D S CAT NUMBER	ITEM LIST FOR Cδ 340 - 293 Cb.
DATE	6 - 9 - 1989.			

ITEM	DRAWING NUMBER	D S CAT NUMBER	DESCRIPTION	No. OFF	REMARKS
	CG3338-402-4C6 & ITEM LIST		BODY OF SUPER CHARGER ASSY		
1	CG 3338-403-2 & ITEM LIST		SUPER CHARGER COVER ASSY	1	TM (A)
2	CG 3338-427 & ITEM LIST		BODY OF BUSHING ASSY	2	
5	3338-420-3		SUPER CHARGER BODY	1	TM (A)
6	3338-432-1		SHAFT BUSHING	1	
			IMPELLER		
7	3338-498		PLUG	2	FOR SPARE PARTS
10	340-294-1		COVER	1	FOR SPARE PARTS
11	402-28-1		BUSHING	2	TM (A)

038/29

ISSUE	DATE	NATURE OF AMENDMENTS	ISSUE	DATE	NATURE OF AMENDMENTS
A	24-4-95	AUTHY. BK 86-190			

DRN		CONTROLLERATE OF QUALITY ASSURANCE (HEAVY VEHICLES) AVADI
CHD		TITLE: BODY OF SUPER CHARGER
TCD		
APPD		
DATE	28-4-95	SHT. No. 1 OF 2 — D S CAT NUMBER — ITEM LIST FOR CG 3338-402-4C6

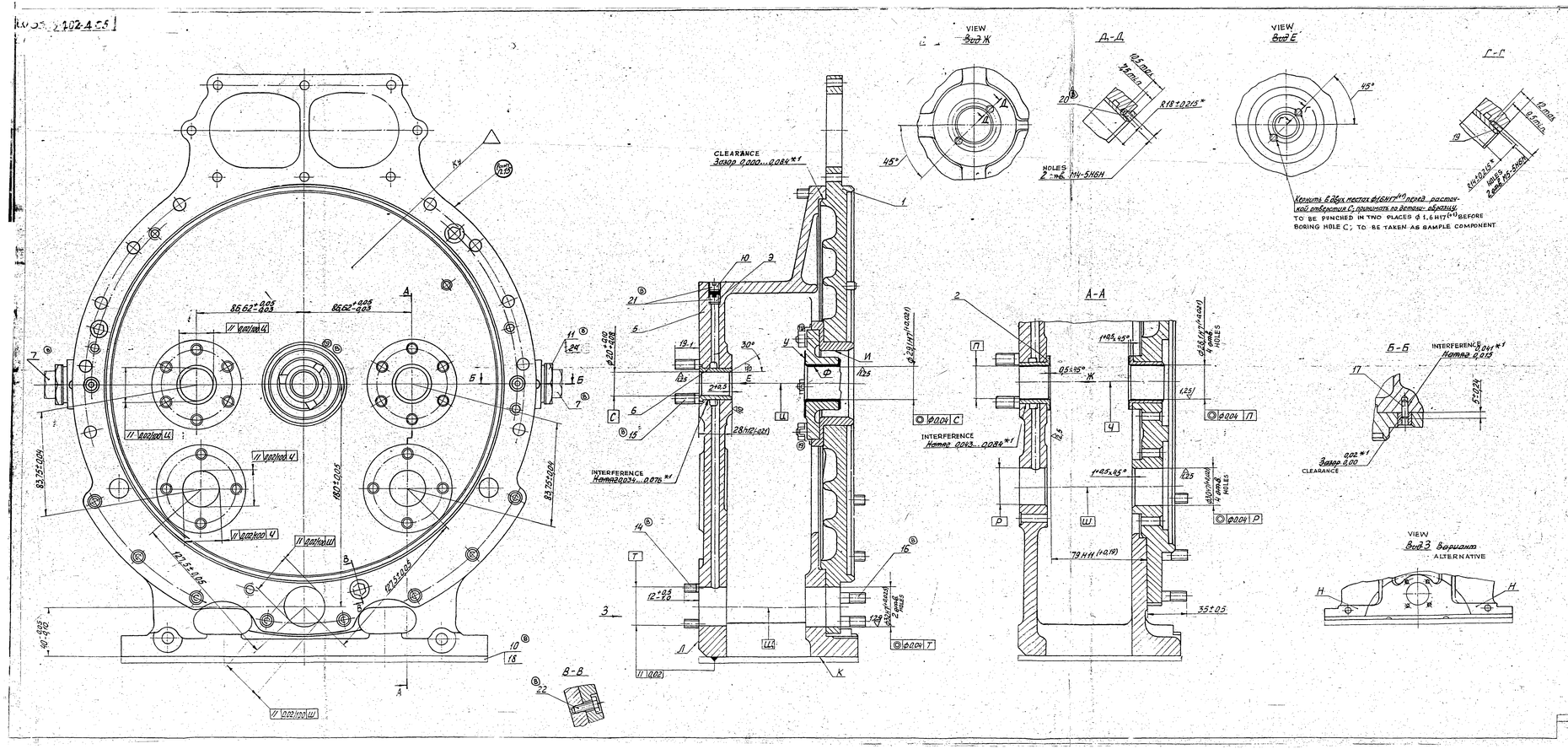

NOTE:-

1. WOOD SCREWS 19 AND 20 ARE TO BE SCREWED AS FAR AS POSSIBLE; TO BE SET ON SEALANT АН-5МА ТУ 6-01-1288-84. AS PER ИЛ-652-86. PROJECTION OF WOOD SCREWS OVER SURFACE IS NOT ALLOWED.
2. WHILE BORING HOLES, OIL DUCTS OF BODY SHOULD BE PROTECTED FROM FALLING-IN OF CHIPS. OIL DUCTS OF THE BODY SHOULD BE CLEAN.
3. RADIAL THICKNESS OF LEAD LAYER OF BRONZE; ON BUSHINGS - (0.8 ± 0.25) mm, ON ROTOR BEARING - (0.65 ± 0.25) mm; TO BE ENSURED BY TOOL.
4. TOLERANCE OF CYLINDRICITY AND OVALITY OF HOLES П, С AND Ф - 0.008 mm. (SEMI-DIFFERENCE OF DIAMETERS).
5. TOLERANCE OF PERPENDICULARITY OF AXIS 'Ш' TO SURFACE 'Л' (OR TO SURFACE 'Н') SHOULD BE 0.05 mm OVER 250 mm LENGTH.
6. DEVIATION FROM PERPENDICULARITY OF SURFACE 'У' TO HOLES 'Ф' AND 'С' SHOULD BE CHECKED BY BLUEING UP TO LEAD COATING; IMPRINT SHOULD NOT BE LESS THAN 70% TO BE CHECKED AFTER TIGHTENING OF NUTS SECURING THE BEARING.
7. DEVIATION FROM FLATNESS OF SURFACE 'К' SHOULD BE CHECKED BY BLUEING. IMPRINT SHOULD BE UNIFORM OVER AREA OF 1 cm² NOT LESS THAN TWO SPOTS.
8. PROTECTION OF BUSHINGS 2 AND 6 OVER SURFACE 'А' IS NOT ALLOWED.
9. OIL DUCTS ARE TO BE CHECKED FOR LEAK-PROOFNESS WITH OIL МТ-16П ГОСТ 6360-83 OR WITH OIL М-16ИХП-3 (М-16 Вг) ГОСТ 25770-83 AT A PRESSURE OF (1.1 ± 0.4) MPa [(11 ± 1) kgf/cm²] AND TEMPERATURE 80° to 100°C FOR 2 MINUTES. LEAKAGE THROUGH THE WALLS AND PLUGS 21 ARE NOT ALLOWED.
10. PLUG 9 SHOULD BE TIGHTENED AS FAR AS POSSIBLE UP TO THE STOP. SPACE BETWEEN THE FACES OF PLUGS 9 AND 10 ARE TO BE FILLED WITH EPOXIDE GLUE No.1 BY COLD HARDENING AS PER ИЛ-110-74. QUANTITY OF GLUE BETWEEN PLUGS SHOULD BE IN SUCH A WAY THAT DURING SCREWING OF THE PLUG 10, THE GLUE SHOULD COME OUT THROUGH THE THREADS. SINKING OF PLUG 10 NOT MORE THAN 1 mm IS ALLOWED. PROJECTION IS NOT ALLOWED.
11. DURING THE ABSENCE OF OXIDATION, SURFACE 'Ц' SHOULD BE COATED WITH PRESERVATING OIL К-17 ГОСТ 10877-76.
12. BEFORE SETTING BUSHINGS П ON THREAD OVER A LENGTH NOT LESS THAN 8 mm FROM THE END FACE OF HEAD SEALANT АН-5МА ТУ6-01-1288-84 TO BE APPLIED AS PER ИЛ-652-86
13. BASE SURFACES К AND Л (OR Н) ARE TO BE PROTECTED FROM NICKS.
14. BEFORE PRESSING THE BUSHINGS THE BODY SHOULD BE HEATED TO A TEMPERATURE OF 60° to 100°C; TO BE PRESSED AS FOR AS POSSIBLE.
15. PAIR NOS. OF COVER AND BODY ARE TO BE MARKED BY PUNCHING.
16. FOR ASSEMBLY UNITS IN TROPICAL MAKE, COMPONENTS AND ASSEMBLY UNIT, HAVING CONVENTIONAL DESIGNATION "ТН" IN THE PARTS LIST OF GIVEN DRAWING IN COLUMN "REMARKS", SHOULD HAVE TROPICAL DESIGN AS SPECIFIED IN THE DRAWINGS OF COMPONENTS AND ASSEMBLY UNITS.
17. INSTEAD OF PLUG 7, COMPONENT 1Б6-038 MAY BE SET WITH SOVARTOUT UNIT НТП 46.
18. * TO BE ENSURED BY TOOL.
19. *1 DIMENSIONS FOR REFERENCE.
20. TO BE SUPPLIED WITH CERTIFICATES.
21. STUDS 16 SHOULD BE SET ON SEALANT АН-5МА ТУ6-01-1288-84 AS PER ИЛ-652-86.

22. FOR ASSEMBLY UNIT IN TROPICALIZED MAKE THE COMPONENTS AND ASSEMBLY UNIT AVAILABLE IN PARTS LIST OF GIVEN DRAWING IN COLUMN "REMARKS" CONVENTIONAL DESIGNATION "ТН" SHOULD HAVE TROPICALIZED MAKE AS SPECIFIED IN THE DRAWINGS FOR COMPONENTS AND ASSEMBLY UNITS.

PILOT SAMPLE BUILD BE APPROVED BY A H S P BEFORE BULK PRODUCTION

EST MASS 14 kg	TO BE STAMPED OR MARKED WHERE INDICATED THUS .S (LETTERS)
ALL SHARP EDGES AND CORNERS TO BE REMOVED UNLESS OTHERWISE STATED MACHINED CORNERS TO HAVE R OUT-SIDE R MODE EQUIVALENT CHAMFERS ARE PERMISSIBLE.	

B	28-6-85	АГТНУ. Б.К. 86-1103	28-6-85
ISSUE	DATE	NATURE OF AMENDMENTS	

DEN — MATERIAL —
CHD
TCD
APPD
DATE 28.4.85
SCALE 1:1
DIMENSIONS IN mm
TOLERANCE ON DIMENSIONS UNLESS OTHERWISE STATED ±0.2
ALL THREADS TO CONFORM TO
D S CAT NUMBER

USED ON:- СД3358-401-10

CONTROLLERATE OF QUALITY ASSURANCE (HEAVY VEHICLES) A V A D I

TITLE BODY OF SUPER-CHARGER ASSEMBLY DRAWING

DRAWING NUMBER СД 3358-402-4СБ

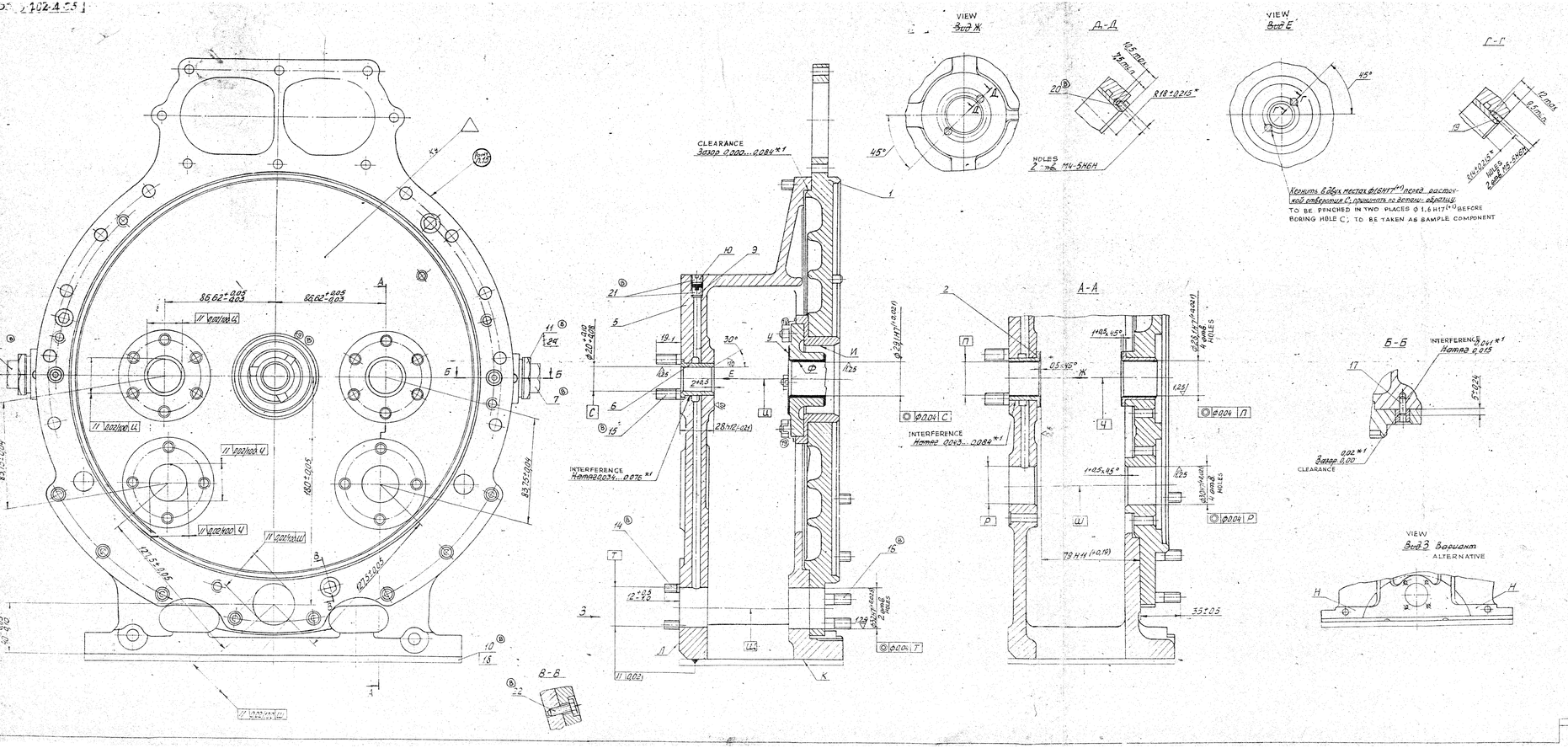

NOTE:-

1. WOOD SCREWS 19 AND 20 ARE TO BE SCREWED AS FAR AS POSSIBLE; TO BE SET ON SEALANT АН-5МА ТУ6-01-1288-84 AS PER ИЛ-652-86. PROJECTION OF WOOD SCREWS OVER SURFACE 18 NOT ALLOWED.
2. WHILE BORING HOLES, OIL DUCTS OF BODY SHOULD BE PROTECTED FROM FALLING-IN OF CHIPS. OIL DUCTS OF THE BODY SHOULD BE CLEAN.
3. RADIAL THICKNESS OF LEAD LAYER OF BRONZE; ON BUSHINGS - (0.8 ± 0.25) mm, ON ROTOR BEARING - (0.45 ± 0.25) mm; TO BE ENSURED BY TOOL.
4. TOLERANCE OF CYLINDRICITY AND OVALITY OF HOLES П, С AND Ф - 0.008 mm (SEMI-DIFFERENCE OF DIAMETERS).
5. TOLERANCE OF PERPENDICULARITY OF AXIS 'Ш' TO SURFACE 'А' (OR TO SURFACE 'Н') SHOULD BE 0.05 mm OVER 250 mm LENGTH.
6. DEVIATION FROM PERPENDICULARITY OF SURFACE 'У' TO HOLES 'Ф' AND 'С' SHOULD BE CHECKED BY BLUEING UP TO LEAD COATING; IMPRINT SHOULD NOT BE LESS THAN 70% TO BE CHECKED AFTER TIGHTENING OF NUTS SECURING THE BEARING.
7. DEVIATION FROM FLATNESS OF SURFACE 'К' SHOULD BE CHECKED BY BLUEING. IMPRINT SHOULD BE UNIFORM: OVER AREA OF 1 cm² NOT LESS THAN TWO SPOTS.
8. PROJECTION OF BUSHINGS 2 AND 6 OVER SURFACE 'А' IS NOT ALLOWED.
9. OIL DUCTS ARE TO BE CHECKED FOR LEAK-PROOFNESS WITH OIL М-16 (Л) GOST 6360-83 OR WITH OIL М-16ИХП-5 (М-16 Вг) GOST 2977D-85 AT A PRESSURE OF (1.1 ± 0.1) MPa [(11 ± 1) kgf/cm²] AND TEMPERATURE 80° to 100°C FOR 2 MINUTES. LEAKAGE THROUGH THE WALLS AND PLUGS 21 ARE NOT ALLOWED.
10. PLUG 9 SHOULD BE TIGHTENED AS FAR AS POSSIBLE UP TO THE STOP. SPACE BETWEEN THE FACES OF PLUGS 9 AND 10 ARE TO BE FILLED WITH EPOXIDE GLUE No.1 BY COLD HARDENING AS PER ИЛ-110-74. QUANTITY OF GLUE BETWEEN PLUGS SHOULD BE IN SUCH A WAY THAT DURING SCREWING OF THE PLUG 10, THE GLUE SHOULD COME OUT THROUGH THE THREADS. SINKING OF PLUG 10 NOT MORE THAN 1 mm IS ALLOWED. PROJECTION IS NOT ALLOWED.
11. DURING THE ABSENCE OF OXIDATION, SURFACE Ш SHOULD BE COATED WITH PRESERVATING OIL К-17 GOST 10877-76.
12. BEFORE SETTING BUSHINGS 11 ON THREAD OVER A LENGTH NOT LESS THAN 8 mm FROM THE END FACE OF HEAD SEALANT АН-5МА ТУ6-01-1288-84 TO BE APPLIED AS PER ИЛ-652-86
13. BASE SURFACES 'К' AND 'А' (OR 'Н') ARE TO BE PROTECTED FROM NICKS.
14. BEFORE PRESSING THE BUSHINGS THE BODY SHOULD BE HEATED TO A TEMPERATURE OF 80° to 100°C; TO BE PRESSED AS FAR AS POSSIBLE.
15. PAIR Nos. OF COVER AND BODY ARE TO BE MARKED BY PUNCHING.
16. FOR ASSEMBLY UNITS IN TROPICAL MAKE, COMPONENTS AND ASSEMBLY UNIT, HAVING CONVENTIONAL DESIGNATION 'ТК' IN THE PARTS LIST OF GIVEN DRAWING IN COLUMN 'REMARKS' SHOULD HAVE TROPICAL DESIGN AS SPECIFIED IN THE DRAWINGS OF COMPONENTS AND ASSEMBLY UNITS.
17. INSTEAD OF PLUG 7, COMPONENT 186-038 MAY BE SET WITH BOUGHT OUT UNIT НТП 46.
18. * TO BE ENSURED BY TOOL.
19. *1 DIMENSIONS FOR REFERENCE.
20. TO BE SUPPLIED WITH CERTIFICATES.
21. STUDS 16 SHOULD BE SET ON SEALANT АН-5МА ТУ6-01-1288-84 AS PER ИЛ-652-86.
22. FOR ASSEMBLY UNIT IN TROPICALIZED MAKE THE COMPONENTS AND ASSEMBLY UNIT AVAILABLE IN PARTS LIST OF GIVEN DRAWING IN COLUMN "REMARKS" CONVENTIONAL DESIGNATION "ТК" SHOULD HAVE TROPICALIZED MAKE AS SPECIFIED IN THE DRAWINGS FOR COMPONENTS AND ASSEMBLY UNITS.

03
129

PILOT SAMPLES WILL BE APPROVED BY A.H.S.P. BEFORE BULK PRODUCTION

1 - 1.5	TO BE STAMPED OR MARKED WHERE
1.5 - 3.0	INDICATED THUS B LETTERS

ALL SHARP EDGES AND CORNERS TO BE REMOVED EXCEPT OTHERWISE STATED MACHINED CORNERS TO HAVE R OUTSIDE R INSIDE FOR SLIDING CHAMFERS ARE PERMISSIBLE

B	25.4.89	АНТНТ. ВХ. 86-1193 ВХ 89			
ISSUE	DATE	VALUE OF AMENDMENTS			

DEN		MATERIAL —	ISSUE ON —
CHD			СБ 3358-401-10
TCD			
APPD		CONTROLLERATE OF QUALITY ASSURANCE (HEAVY VEHICLES) AVADI	
DATE	23.4.85		
SCALE	1:1		

DIMENSIONS IN mm
TOLERANCE ON DIMS UNLESS OTHERWISE STATED ±0.2 ±0.5
ALL THREADS TO CONFORM TO

TITLE: BODY OF SUPER-CHARGER ASSEMBLY DRAWING

D S CAT NUMBER

DRAWING NUMBER: СБ 3358-401-10

USED ON	ITEM	DRAWING NUMBER	D S CAT NUMBER	DESCRIPTION	No OFF	REMARKS
	14	350 - 03 ✓		STUD M6 X 24	4	
	15	350 - 15 ✓		STUD M8 X 35	12	
	16	350 - 37 ✓		STUD M8 X 51	8	
	17	352 - 31 ✓		DOWEL 5h6 X 14	2	
Ⓐ	18	354 - 22 ✓		LOCKING WIRE	4	FOR SPARE PARTS
				L = 120 MM		
	19	356 - 51 ✓		LOCK WOOD SCREW	2	
	20	356 - 57		LOCK WOOD SCREW	4	
	21	356 - 63 - 3 ✓		PLUG	6	
Ⓐ	22	356 - 84 - 1		BOLT M6 X 20	3	

CD 3338-401-10

ISSUE	DATE	NATURE OF AMENDMENTS	ISSUE	DATE	NATURE OF AMENDMENTS
A	24-4-95	AUTHY BK 86-190			

DRN		CONTROLLERATE OF QUALITY ASSURANCE (HEAVY VEHICLES) AVADI
CHD		TITLE: BODY OF SUPER CHARGER ASSY
TCD.		
APPD		
DATE	28-4-95	SHT No 2 OF 2 — D S CAT NUMBER — ITEM LIST FOR CG3338-402-4C6