DRG. No. GCF/50/39490

DRAWING CONVENTIONS CONFROM TO SP:46
DIMNS. ARE IN mm. UNLESS OTHERWISE STATED.

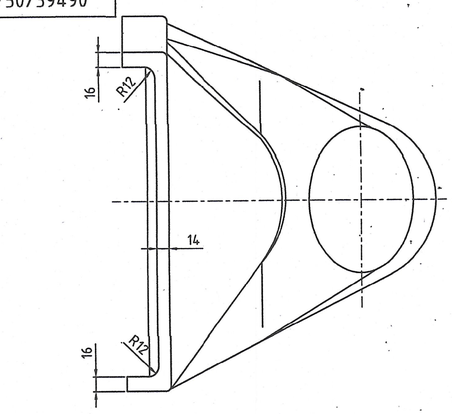

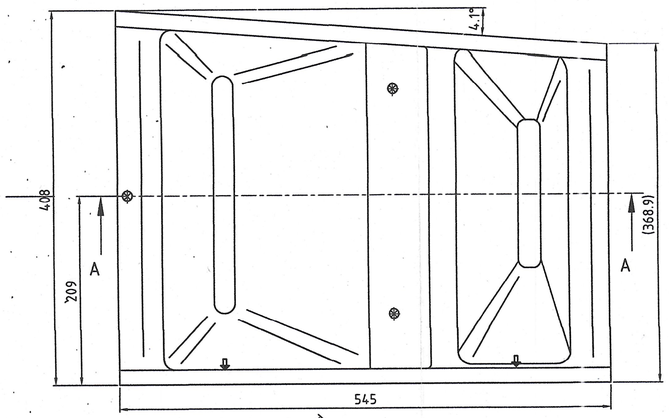

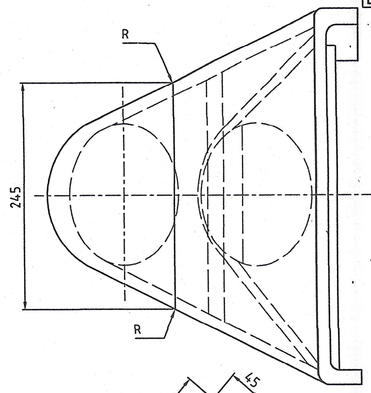

C--C

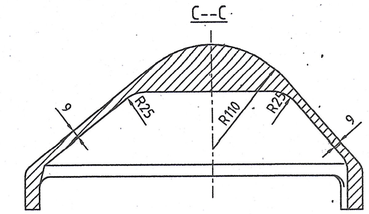

B--B

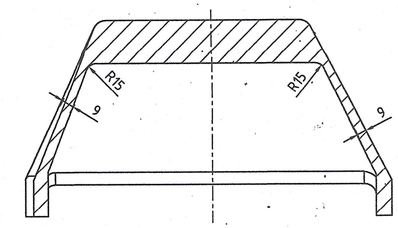

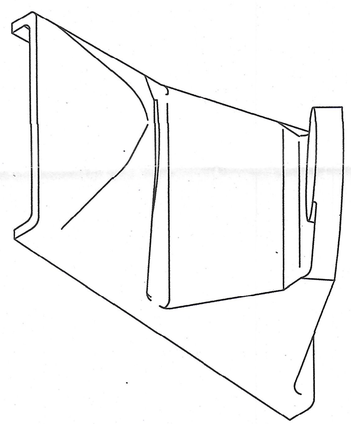

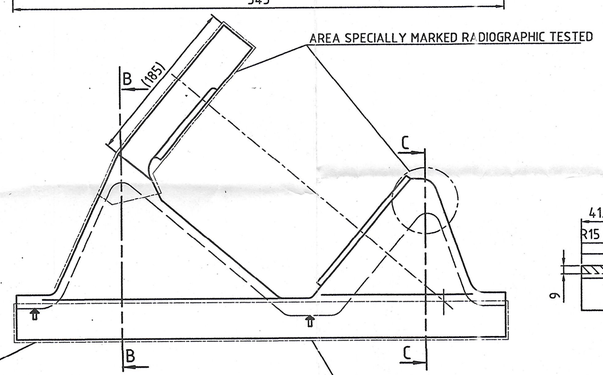

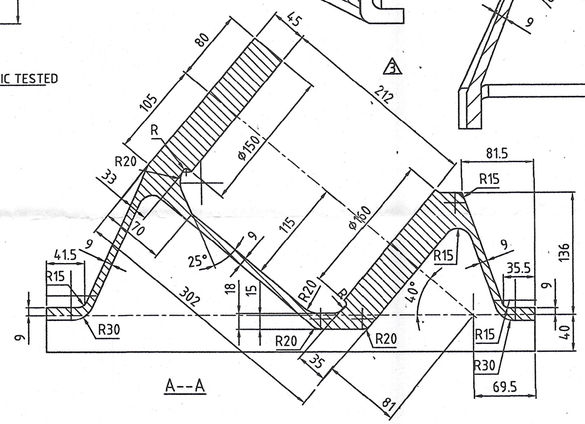

A--A

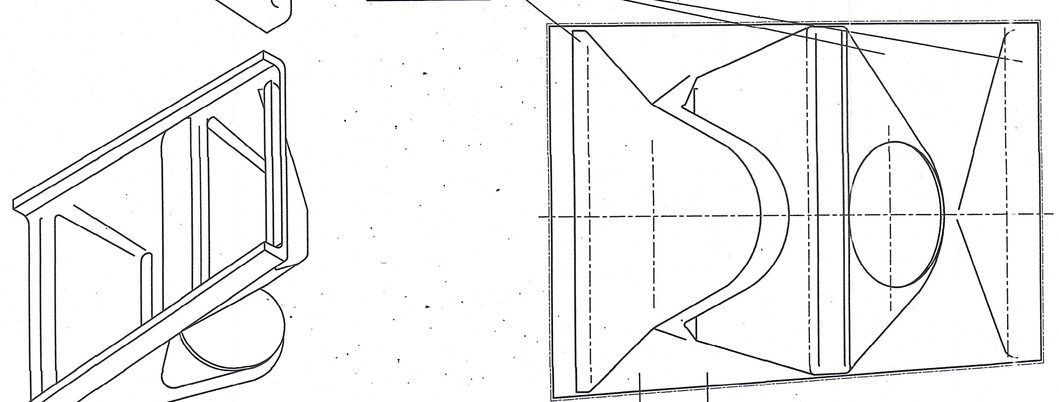

AREA SPECIALLY MARKED RADIOGRAPHIC TESTING

CHARGE NO.
STAMP. 213-5-5A

2025500
CASTING No.Z13-2-10A

Weight 51.5 Kg

OEM MATL. - SS 2225-24

NOTE:-
1. APPRORIATE CASTING CLEARANCE TO BE APPLIED.
2. CAST RADIUS 3 APPLIES UNLESS OTHERWISE STATED
3. DIMENSIONS GIVEN REGARDING WALL THICKNESS ARE MINIMUM CASTING TOLERANCE ACCORDING TO 55722 GTA 16-18
4. MANUFACTURING SPECIFICATION A 2003 AND 0 804 092
5. ASIM E446-78 CLASS 2, GROUP A, B AND C GROUP D,E,F AND G ARE NOT ACCEPTED
6. ONE TENSILE TEST FROM SEPARATLY CAST TESTPIECE FOR EACH CHARGE
7. THE AREA OTHER THAN SPECIFIED ARE TO BE TESTED FOR RADIOGRAPHIC LEVEL 3

FOR COMPONENT SEE DRG. 2025500

MATL:- IS: 10343- 1999, Gde 8Q, COND'QT' WITH %S & %P EACH 0.035 MAX. TO ACHIEVE Rp0.2 = 600 Mpa MIN., Rm = 800 - 950 Mpa, El = 10%, HB = 235 - 285.

P.No.	NOMENCLATURE	No. OFF	MATERIAL	HARDNESS	STANDARD	SIZE	REMARKS

GEN. TOL. NOT SPECIFIED

LINEAR DIMENSIONS

0-6	±0.1
6-30	±0.2
30-120	±0.3
120-315	±0.5
315-1000	±0.8
1000-2000	±1.2

ANGULAR DIMENSIONS

0-10°	±1°
10-50°	±30'
50-120°	±20'
>120°	±10'

~ UNMACHINED
▽ ROUGH
▽▽ SMOOTH
▽▽▽ FINISH

INDEX	AMENDMENTS	SIGN	DATE

BRACKET , CASTING
FOR
DHANUSH 155 mm FH GUN

GUN CARRIAGE FACTORY, JABALPUR

FOR Sr. GM G.C.Fy.

2014	NAME	DATE	APPROVED
DRN.	Alok	03/12/14	
CKD.			JWM/Shop
HOS/DO			
SEC.	M/C		JWM/TR

SCALE | REF.DEMD.
REF.DRG.NO. 2025460
DRG.No. GCF/50/39490
SHEET NO. 1 OF 1 SHEETS