D.S.CAT. No. 1005-560082

DRAWIN CONVENTIONS CONFORM TO JSG-0104
DIMNS ARE IN mm. | GEN. TOL. 'MEDIUM' IS:2102

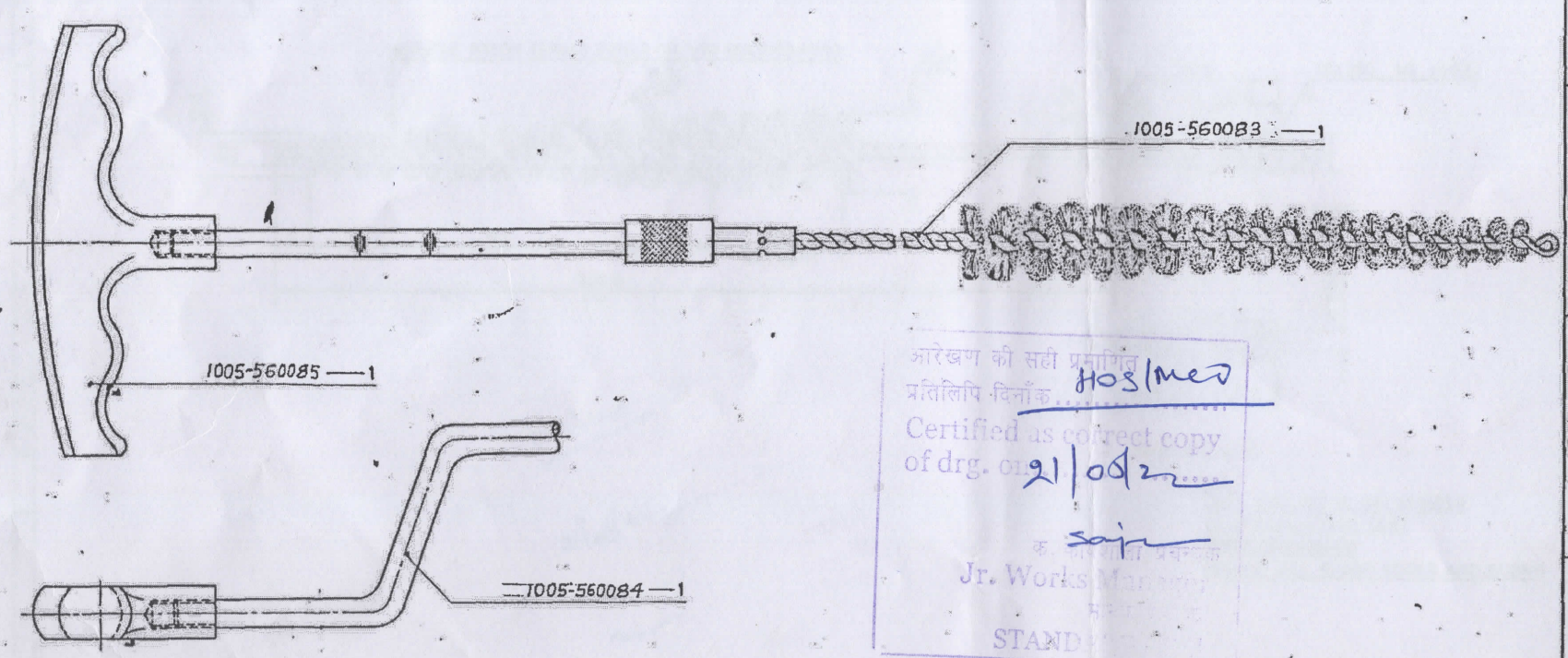

आरेखण की सही प्रमाणित प्रतिलिपि दिनांक 30/10/02
Certified as correct copy of drg. on 21/10/02
Jr. Works Manager
STAND

NSN: B2/1005-72-0000082

DATE	AUTHY.	BRIEF RECORD	ZONE	I/C.D.O.	G.O.
30-7-10	26532-SA	NSN ADDED			
18-2-03	25683-SA	NOMENCLATURE AMENDED & D.S.CAT.NOS.ADDED.			
13-02-2002.	25267-SA.	DRAWING PROV. SEALED.			

SEALED:- PROV. DC.NO. 25267-SA DT. 13-02-2002.

NOMENCLATURE BRUSH CLEANING BRACKET AND CYLINDER GAS

DRN. | CHD. | TRD | COMP.
SCALE :- 1:1 | EST. MASS -
APPROVED
DT. 11.9.01. I/C,D.O. DT. 11.9.01. DAC. FOR CQA(SA)
MATERIAL
HT./HARDNESS
PROTECTIVE FINISH

AHSP. CQA(SA) ICHAPUR
ASSY.
DGNR'S REF. 1005-007813
PART NO.
DRG. NO CQA(SA) SK-459
D.S.CAT. NO. 1005-560082

D.S. CAT. NO. 1005-560083

DRAWING CONVENTIONS CONFORM TO JSG-0104
DIMNS. ARE IN mm. | GEN. TOL. 'MEDIUM' IS: 2102

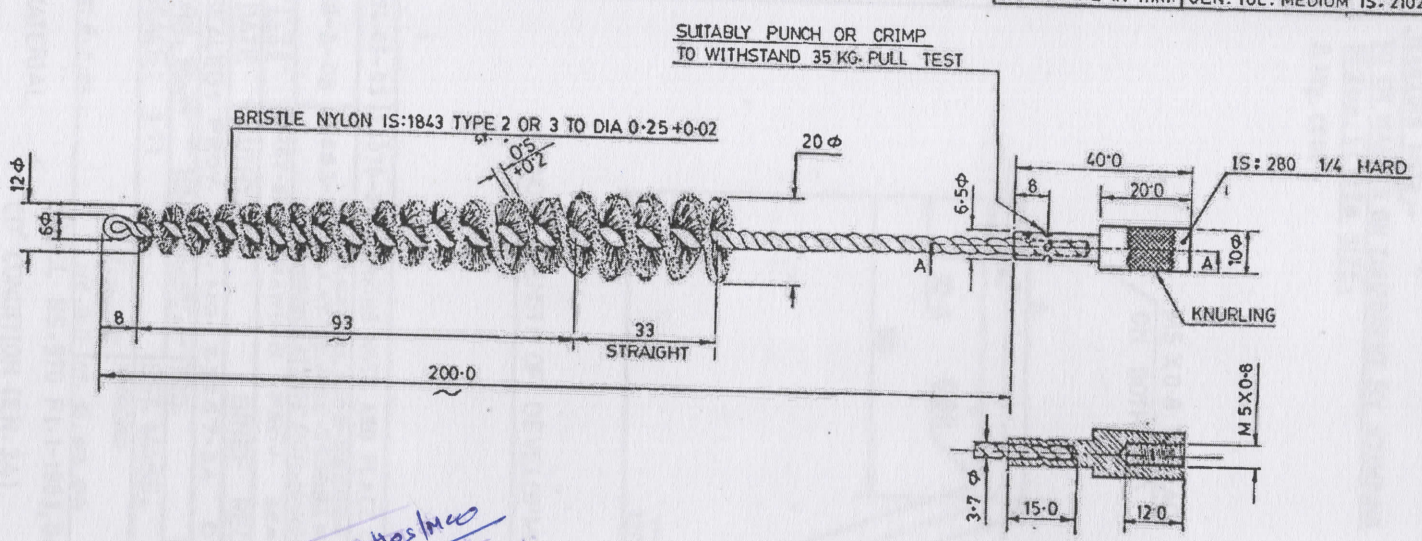

PART SEC – AA

NOTE:-
2·0 Φ WIRE STEEL GALVANISED
TO SPECN. IS: 280 SOFT
TWIST - STANDARD
REMOVE ALL SHARP EDGES AND BURRS

18-2-03	25683-SA	D.S.CAT.NO.1005-560083 ADDED & IN ASSY.COLUMN D.S.CAT. NO.1005-560082 WAS CQA(SA) SK. 459			
13-02-2002.	25267-SA	DRAWING PROV. SEALED.			
DATE	AUTHY.	BRIEF RECORD	ZONE	I/C,D.O	GO
SEALED PROV. DC. NO. 25267-SA DT. 13-02-2002.				SIG.	

NOMENCLATURE : BRUSH CLEANING

DRN.	CHD.	TRD.	COMP.
SCALE : 1:1		EST. MASS	
DT. 11.9.01	I/C,D.O	APPROVED DT. 11.9.01	FOR CQA(SA)
MATERIAL : AS STATED			
H.T/HARDNESS			
PROTECTIVE FINISH			

AHSP. CQA(SA)ICHAPUR
ASSY. 1005-560082
DGNR'S REF.
PART NO.
DRG. NO. CQA(SA)SK-460
D.S. CAT NO. 1005-560083

D.S.CAT. NO. 1005-560084	DRAWING CONVENTION CONFORM TO JSG-0104
	DIMNS. ARE IN mm. GEN. TOL. MEDIUM IS:2102

MARKING NOTE:-
TO BE MARKED ON COMPONENT BY STAMPING IN 2mm. LETTER SIZE.
Δ Mfg. CODE

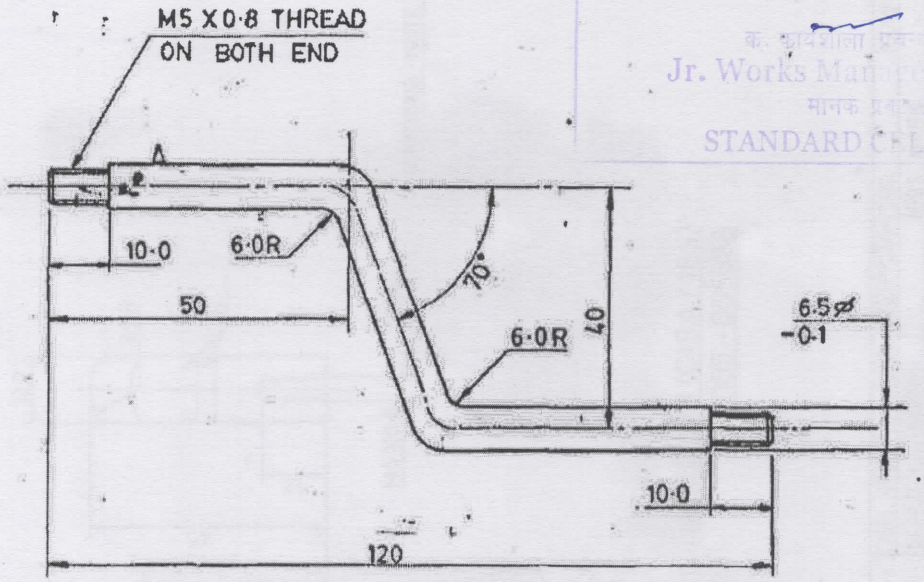

NOTE - LENGTH OF DEVELOPMENT ROD APROX. 148 mm.

DATE	AUTHY.	BRIEF RECORD	ZONE	I/C.D.O.	GO.
24-05-03	26070-SA	MARKING NOTE AND PLACE OF MARKING ADDED	B/2		
18-2-03	25683-SA	D.S.CAT. NO. 1005-560084 ADDED, IN ASSY. COLUMN D.S.CAT. NO. 1005-560082 WAS CQA(SA) SK-459 & IN NOMENCLATURE ROD, HANDLE WAS HANDLE ROD.			
13-02-2002	25267-SA	DRAWING PROV. SEALED.			

SEALED: PROV. DC. NO. 25267-SA DT. 13-02-2002. SIGN.

DRN.	CHD.	TRD.	COMP.
SCALE: 1:1		EST. MASS.	
DT. 6.2.02.	I/C.D.O.	APPROVED DT. 6.02.02	DAC. FOR CQA(SA)
MATERIAL :	STEEL BS.970 Pt.1-1983, Gd.070 M 20 'CD' CONDITION (EN.3A)		
HT/HARDNESS :			
PROTECTIVE FINISH :	PHOSPHATE TO SPECN. JSS:0465-01-1988 CLASS-II (ACCELERATED), OIL FINISH		
NOMENCLATURE :	ROD, HANDLE		

AHSP.	CQA(SA) ICHAPUR
ASSY.	1005-560082
DGNR'S REF.	
PART No.	
DRG. No.	CQA(SA) SK-461.
D.S.CAT. No.	1005-560084

Certified as correct copy of drg. on 21/05/03
Jr. Works Manager
STANDARD CELL

DS CAT NO. 1005-560085

DRAWING CONVENTIONS CONFORM TO JSG-0104

DIMNS. ARE IN mm. | GEN. TOL. 'MEDIUM' IS:2102

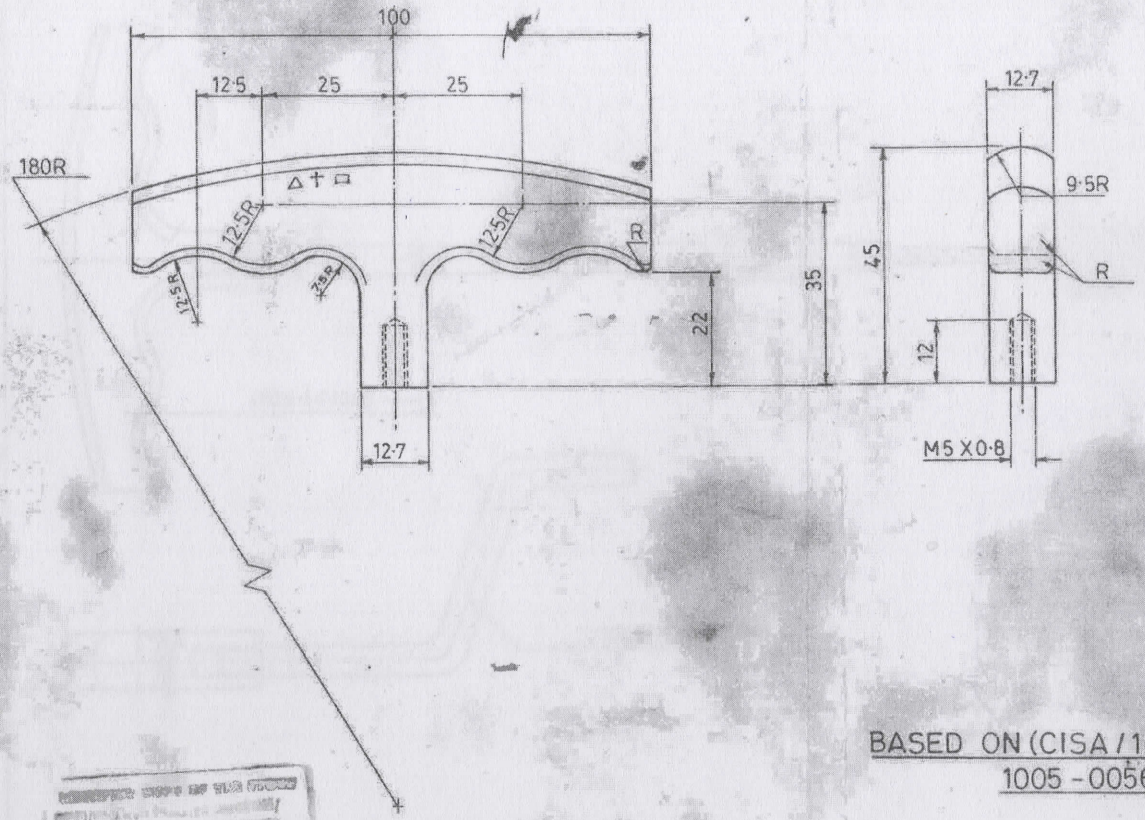

MARKING NOTE: TO BE MARKED ON COMPONENT BY STAMPING IN 2mm. LETTER SIZE.

† MANUFACTURER'S CODE
△ Yr. OF Mfg.
□ D.S.CAT. NO.

BASED ON (CISA/165)
1005-005628

आरेखण की सही प्रतिलिपि
प्रतिलिपि निर्माक
Certified to be correct copy of dr.
Jr. Works Manager
मानक प्रकोष्ठ
STANDARD CELL

04/04/06

26-5-05	26071-SA	MARKING NOTE AND PLACE OF MARKING ADDED	B/2		
18-2-03	25683-SA	D.S.CAT. NO. 1005-560085 ADDED & IN ASSY. COLUMN D.S.CAT. NO. 1005-560082 WAS CQA(SA) SK 459.			
13-02-2002.	25267-SA	DRAWING PROV. SEALED			
DATE	AUTHY.	BRIEF RECORD	ZONE	I/C & D.O	G.O
SEALED:- PROV. DC. NO. 25267-SA DT. 13-02-2002.				SIGN.	

NOMENCLATURE :- HANDLE

DGN. | CHD. | TRD. | COMP.

SCALE :- 1:1 | EST. MASS

APPROVED DAC

DT. 06.2.2K2 I/C, D.O. | DT. 06.2.2K2 FOR CQA(SA)

MATERIAL :- BS:1490 LM6-M OR IS:617-1975 ALLOY DES 4600M

HT/HARDNESS :-

PROTECTIVE FINISH :-

AHSP CQA(SA) ICHAPUR

ASSY. 1005-560082.

DGNR'S REF.

PART NO.

DRG NO. CQA(SA)SK-462

DS CAT. NO. 1005-560085