GEN. TOL. MEDIUM CLASS TO IS: 2102

REF.: DC 36157-A, DATED: 28-08-96.

THIS DRAWING SUPERSEDES THE DRG. NO: C2101, DT 28-05-84 AND PREVIOUS DRAWINGS OF SAME NUMBER.

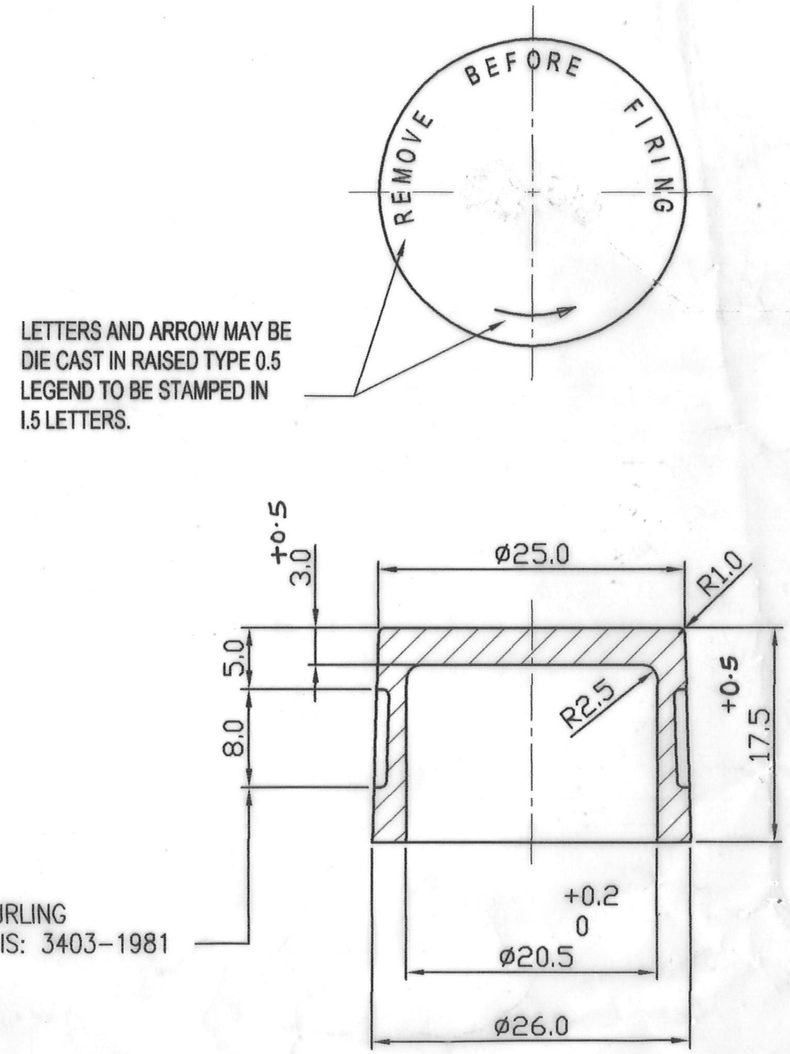

MATERIAL:-

ZINC BASE ALLOY DIE CASTING TO IS: 742 :1981 (SECOND REVISION) ALLOY Zn Al4 OR BS: 1004-1972 AMD 2777 ALLOY 'A' & CASTING MUST BE TO JSS-0464-01-1986-CLASS-2.

ITEM NO.	NO. OFF	MATERIAL	DESCRIPTION
1	1	AS ABOVE	DIE CASTING

LIST OF PARTS

DT. & SIGN.	DESCRIPTION
Poomal JWM/CDO 68/06 DT.-27-11-06	DRG. AMEND. AS PER OFRAT DRG. NO.-KAT/DC-154- DT. - 14-12-94
Poomal JWM 28/06 DT.-15-05-06	DRG NO C-2252 WAS SC-51-13-001-0 DRG MADE FROM DILAPILATED DRG. AND UP DATED AS PER LATEST DC(I) NO DC 36157-A, DT. 28/8/96

AMENDMENT

SCHEDULE NO.

SCALE: 2 : 1 PROJECTION THIRD ANGLE

DRAWN BY: mukesh 15-05-06

CHECKED BY: S.Roy 15-05-06

APPROVED BY: Poomal 15.05.06

CONCURRED BY JWM (FUZE)

DATE: 18.5.06 SIGN:

Compt.: SAFETY CAP FOR FUZE DA5A

St. Drg. No.: IQX-1011

DIE CASTING
SAFETY CAP

DRG. NO.: C-2252 A

M/C:

NO. OF SHEETS : 1

G & S FY. COSSIPORE

SHEET NO.: 1

PREVIOUS DRG. NO. SC-51-13-001-0