DRG CONVENTIONS CONFORM TO IS: 696
DIM ARE IN mm

PART No

DRG NO ARDE 1947
DET NO 57, 3SHTS, SHT No 1

LIST OF COMPONENTS

ITEM No	NOMENCLATURE	No OFF	MATL	DRG No	DET No.	PART No
1	CONE FUNNEL	1		ARDE 1947	57 SHT 2	
2	CYLINDRICAL FUNNEL	1		ARDE 1947	57 SHT 3	

NOTES:-

1) WELDING SYMBOLS ARE TO SPEC IS: 813.
2) PROCEDURE OF WELDING TO MEET TO SPEC IS 819

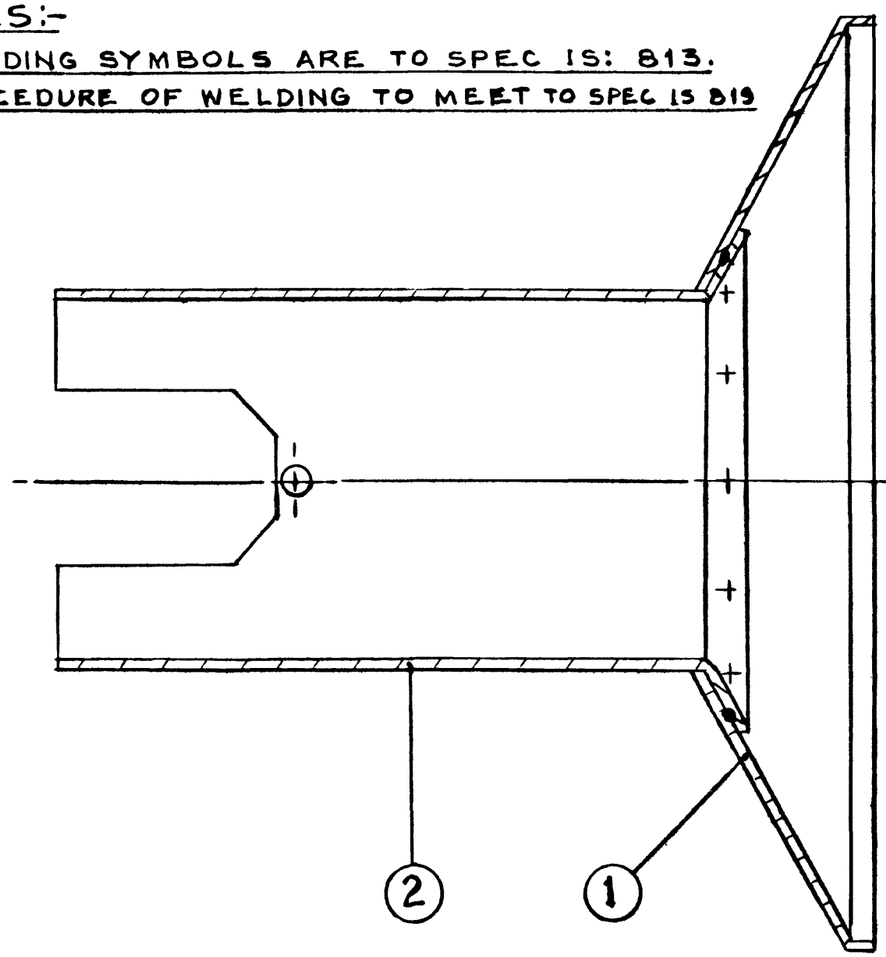

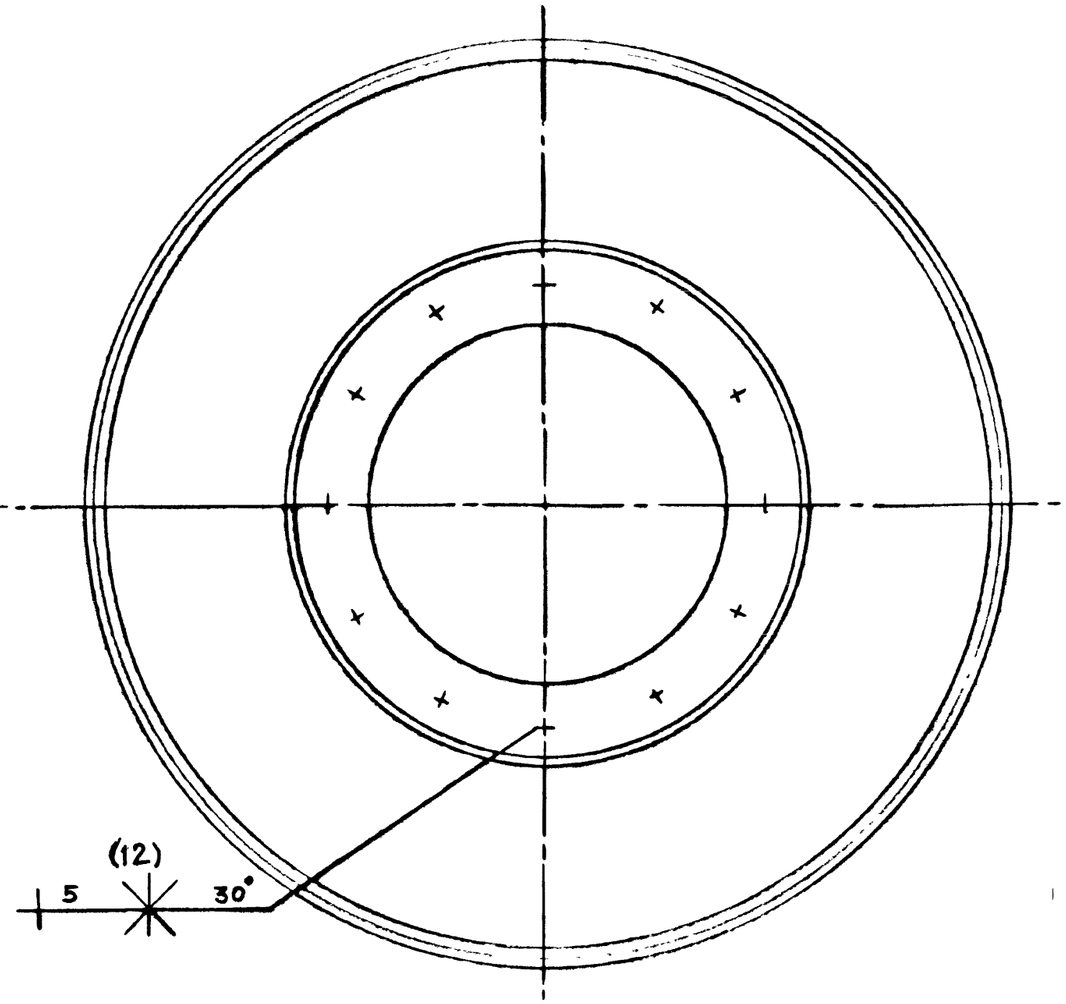

R NO	DATE	AUTHORITY	BRIEF RECORD	ZONE	CD	GD
2	11 5 2000		RETRACED WITHOUT CHANGE			
1	15 3 83		TRACED WITHOUT CHANGE		Sd	Sd

SIGN

DRG SEALED sd Wg. Cdr CRE (AA)

DRN LVP | CHD DVK | TRD BMN | COMP sd
CD sd | PASSED
APPROVED sd Wg Cdr FOR DIRECTOR 4 FEB.84
MATL:-
PROTECTIVE FINISH

SCALE:- 1:2
EST WEIGHT -
GAUGE SCHD
DATE 6 5 80

ASSY DRG ARDE 1947/54 SHT 1
DESIGN AUTHORITY
ARDE PUNE-21

DRG.No. ARDE 1947
DET No. 57, 3SHTS SHT No 1
PART No
DS CAT No
AHSP

FUNNEL ASSY

TCD | CHD DRG 13.6.84 | CHD SEC 21/7