DRAWING NUMBER 172.32.567

SHEET No. 1 OF 1

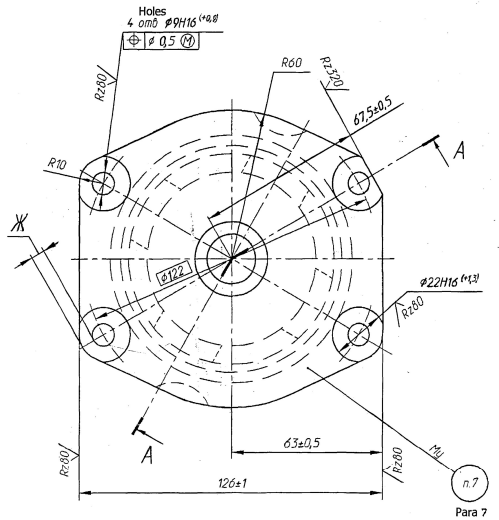

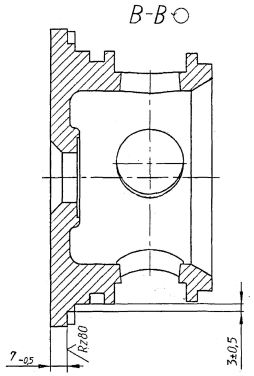

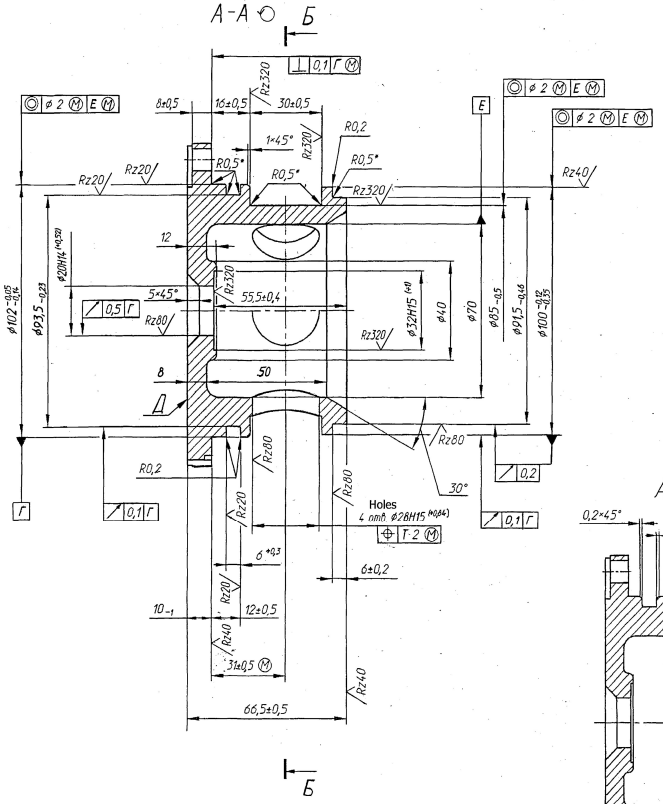

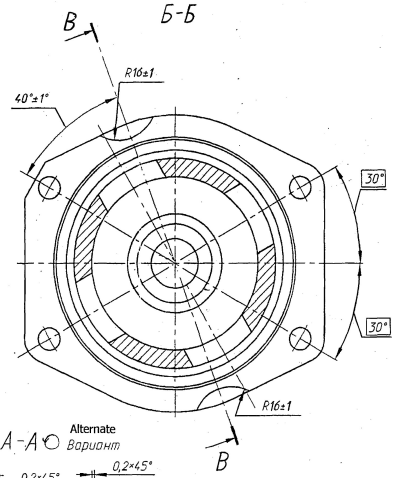

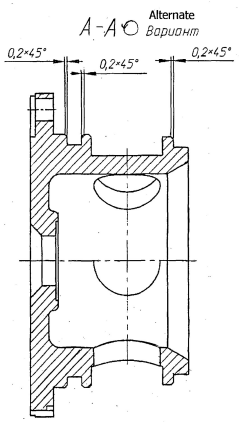

1. Alternate - material aluminium alloy AK5M GOST 1583-93.
2. Requirements for casting are as per 172.TY6.
3. Permissible deviations for rough dimensions should be $^{+2}_{-1}$ mm.
4. External drafts should not exceed 3° to the increasing side of body of the casting.
5. Unspecified casting radii - 0^{+5} mm.
6. Dimension Ж should not be less than 3.5 mm.
7. Mark with letter type ПО-6 GOST 2930-62.
8. Machining of surface Д with surface finishing Rz = 80 micron is permitted.
9. Hardness and mechanical properties of alloy are as per mode T5 GOST 1583-93.
10. *Dimensions to be ensured by tool.
11. Other requirements as per 520.TY1.

(13A) ALT. MATL: GRADE 4450 TO IS:617-1994

PILOT SAMPLE SHOULD BE APPROVED BY A H S P BEFORE BULK PRODUCTION.

EST. WT (kg)	TO BE STAMPED OR MARKED WHERE INDICATED THUS # (LETTERS)
0.55	

ALL SHARP EDGES AND CORNERS TO BE REMOVED UNLESS OTHERWISE STATED MACHINED CORNERS TO HAVE R OUTSIDE R INSIDE EQUIVALENT CHAMFERS ARE PERMISSIBLE

ISSUE	DATE	NATURE OF AMENDMENTS
13A	6.12.05	AUTHY Lt.No 80001/CQA(HV)/GEN Dt 30.11.05

DRN	
CHD	
APPD	
DATE	01.09.04
SCALE: 1 : 1	
DIMENSIONS IN mm	
TOLERANCE ON DIMNS UNLESS OTHERWISE STATED IS : 2102 - 69	
ALL THREADS TO CONFORM TO	
D S CAT NUMBER	

MATERIAL :- Aluminium alloy AK7ч GOST 1583 - 93

USED ON :- 172.32.157cb-1Cb

CONTROLLERATE OF QUALITY ASSURANCE (HEAVY VEHICLES) AVADI

TITLE :- FILTER COVER

DRAWING NUMBER 172. 32. 567

COMMON TO T-72 & BLT
DRG. INDIANISED BASED ON RUSSIAN ORIGINAL ISSUE - 13

356
SUPPLY CODE
U-01-1-4
D 90208

F-102
18

SIZE A3×3