M 4033

NOTES:

1. FINISH 32 UNLESS OTHERWISE SPECIFIED.
2. BREAK EDGES 0.076 + 0.305 UNLESS OTHERWISE SPECIFIED.
3. MATERIAL:
   A. WROUGHT: STEEL, ASTM A576 OR ASTM A108; 1075 TO 1084; ASTM A322 OR ASTM A331, 4140.
   B. INVESTMENT CASTING: MIL-S-22141, 1C6150. TENSILE TEST SHALL NOT APPLY. INSPECTION SHALL BE IN ACCORDANCE WITH CLASS 2, GRADE A OF MIL-STD-2175.
4. HEAT TREATMENT:
   A. WROUGHT MATERIAL: HEAT AT 774 TO 802° C. OIL QUENCH, TEMPER 1 HOUR MINIMUM TO HARDNESS SPECIFIED (RH A 73.5-77).
   B. CASTING: HEAT AT 818 TO 843° C. OIL QUENCH, TEMPER 1 HOUR MINIMUM TO HARDNESS SPECIFIED (RH A 73.5-77).
5. FINAL PROTECTIVE FINISH: FINISH 5.3.1.2 OR 5.3.2.2 OF MIL-STD-171.
6. ASME Y14.5M-1994 APPLIES.

REVISIONS				
ZONE	REV.	DESCRIPTION	DATE	APPROVED
	A	CREATE DRAWING	3/24/2016	G. HERSHBERGER

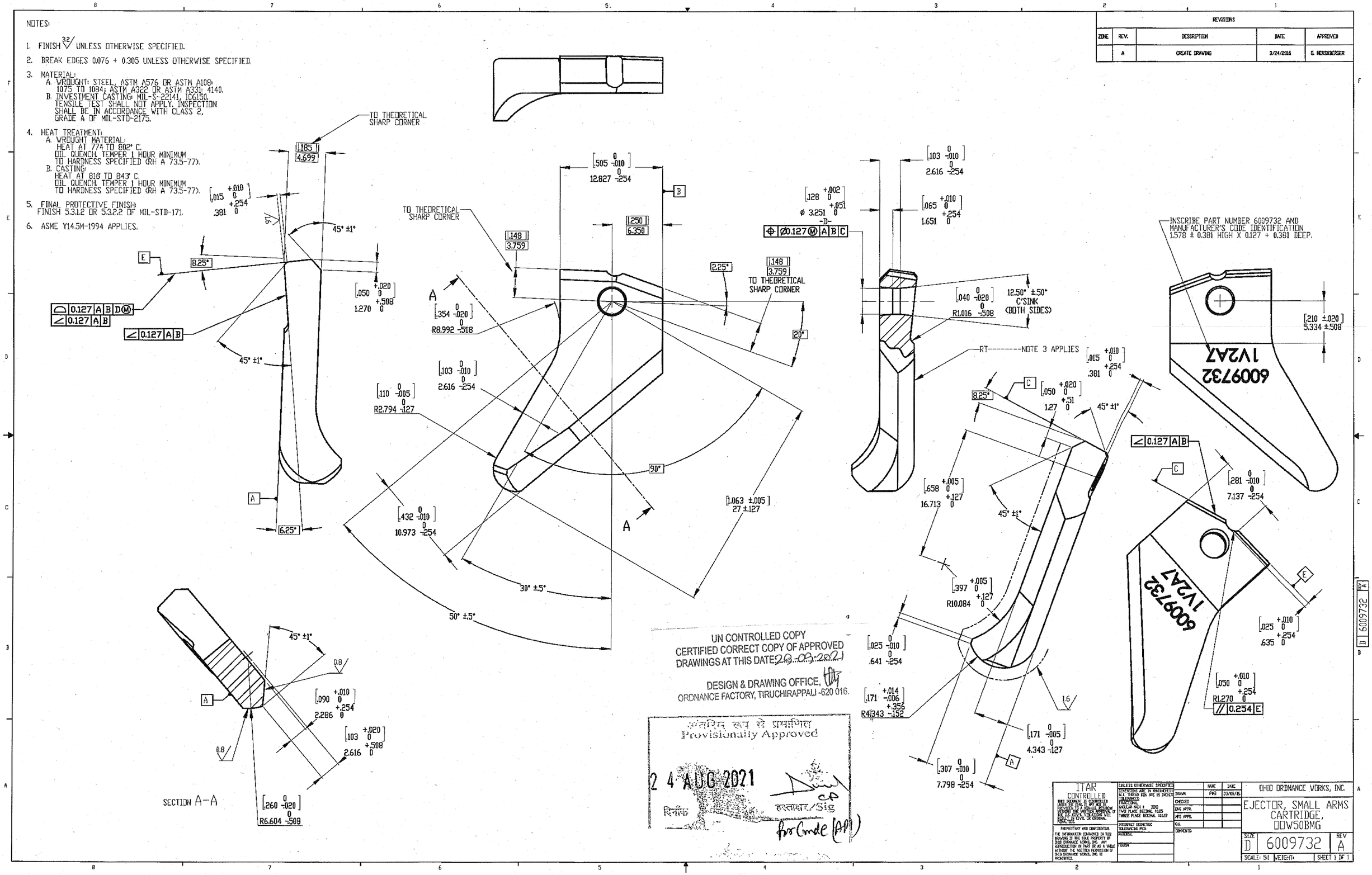

UN CONTROLLED COPY
CERTIFIED CORRECT COPY OF APPROVED DRAWINGS AT THIS DATE 20.09.2021

DESIGN & DRAWING OFFICE,
ORDNANCE FACTORY, TIRUCHIRAPPALI -620 016.

अनंतिम रूप से प्रमाणित
Provisionally Approved
24 AUG 2021
दिनांक
हस्ताक्षर/Sig
for Cmde (PP)

ITAR CONTROLLED

THIS DRAWING IS CONTROLLED UNDER THE ITAR. IT MAY NOT BE REPRODUCED IN ANY WAY OR DISCLOSED TO A FOREIGN INDIVIDUAL WITHOUT THE WRITTEN APPROVAL OF THE OFFICE OF DEFENSE TRADE CONTROLS. VIOLATIONS WILL RESULT IN CIVIL OR CRIMINAL PENALTIES.

PROPRIETARY AND CONFIDENTIAL

THE INFORMATION CONTAINED IN THIS DRAWING IS THE SOLE PROPERTY OF OHIO ORDNANCE WORKS, INC. ANY REPRODUCTION IN PART OR AS A WHOLE WITHOUT THE WRITTEN PERMISSION OF OHIO ORDNANCE WORKS, INC IS PROHIBITED.

UNLESS OTHERWISE SPECIFIED
DIMENSIONS ARE IN MILLIMETERS
ALL THREAD DIA. ARE IN INCHES
TOLERANCES
FRACTIONAL ±
ANGULAR MACH ± BEND ±
TWO PLACE DECIMAL ±0.25
THREE PLACE DECIMAL ±0.127
INTERPRET GEOMETRIC TOLERANCING PER
MATERIAL
FINISH

	NAME	DATE
DRAWN	PHR	03/08/16
CHECKED		
ENG APPR.		
MFG APPR.		
Q.A.		

COMMENTS:

OHIO ORDNANCE WORKS, INC.

EJECTOR, SMALL ARMS CARTRIDGE, 00W50BMG

SIZE D | 6009732 | REV A

SCALE: 5:1 WEIGHT: SHEET 1 OF 1

D 6009732 A