DRG. NO.–

PROVISIONAL

NOTES :–

1. PART SHALL BE FREE FROM ALL KINDS OF DEFECTS.
2. ALL SHARP EDGES TO BE SMOOTHLY ROUNDED OFF.
3. REMOVE BURRS AFTER MACHINING.

MATL:–

BS 970 / EN 26 OR 36B– 1955

TREATMENT– HARDENED & TEMPERED TO 450 – 500 VPN

ALL DIMNS. ARE IN MM.
UNTOL. DIMNS. ARE AS PER IS:2102 (MEDIUM CLASS).

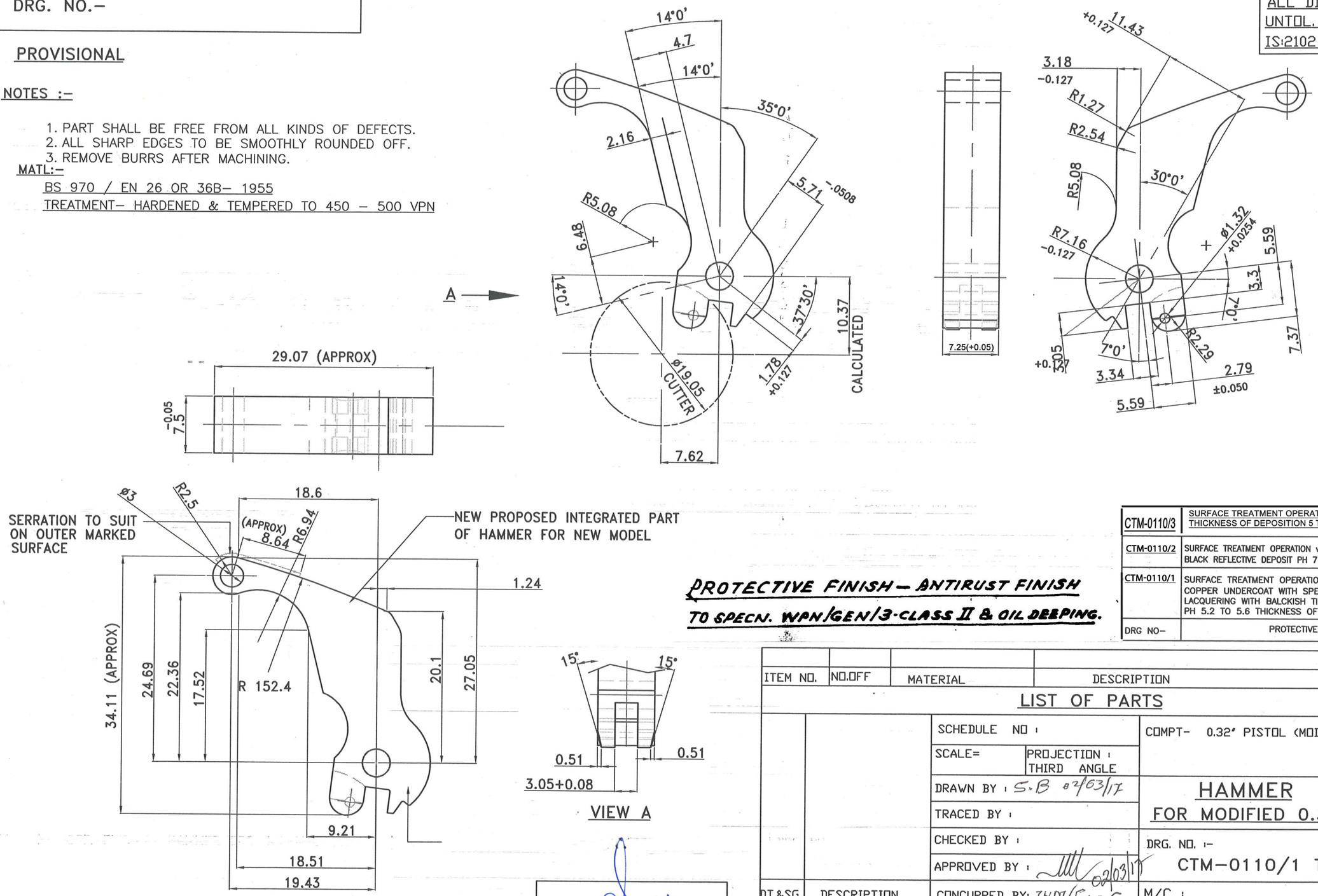

PROTECTIVE FINISH – ANTIRUST FINISH TO SPECN. WPN/GEN/3-CLASS II & OIL DEEPING.

CTM-0110/3	SURFACE TREATMENT OPERATION VIZ: BLACK CHROMIUM PLATING THICKNESS OF DEPOSITION 5 TO 7 MICRON ON COMP.
CTM-0110/2	SURFACE TREATMENT OPERATION viz. ELECTROLESS NICKEL PLATING WITH BLACK REFLECTIVE DEPOSIT PH 7 TO 7.5 , THICKNESS 8 TO 12 MICRON
CTM-0110/1	SURFACE TREATMENT OPERATION viz. NICKEL PLATING WITH COPPER UNDERCOAT WITH SPECN BS:1224 1970 FOLLOWED BY LACQUERING WITH BALCKISH TIN JOB PALLADIUM BLACK NICKEL PH 5.2 TO 5.6 THICKNESS OF 5 TO 6 MICRON
DRG NO–	PROTECTIVE FINISH

ITEM NO.	NO.OFF	MATERIAL	DESCRIPTION	REMARKS

LIST OF PARTS

SCHEDULE NO :		COMPT– 0.32" PISTOL (MODIFIED)	STORE DRG. No.	
SCALE=	PROJECTION : THIRD ANGLE			
DRAWN BY : S.B 02/03/17		HAMMER FOR MODIFIED 0.32" PISTOL		
TRACED BY :				
CHECKED BY :		DRG. NO. :– CTM–0110/1 TO CTM–0110/3		
APPROVED BY : 02/03/17				
CONCURRED BY: JHM/Gen C		M/C :	NO. OF SHTS. : 1	
DATE: 02/03/17	SIGN.: 2/3/17	G. & S. FY. COSSIPORE	SHT. NO. : 1.	

DT.&SG.	DESCRIPTION
AMENDMENTS	

APPROVED BY : DGM ORD/PLNG

REF- DGM/ PLNG & MKTNG LETTER NO- - 107/PISTOL DEVELOPMENT/DGM/16-17, DT- 07/03/2017