DRG. NO.	DATE	AMENDMENT	SIG.	D.A. NO.
	18.1.02	NOMENCLATURE 'PLUNGER' WAS 'PLUNGER HOUSING' MATL 'STEEL BS: 970 Pt. 1 1983. 070M55' WAS '15: 280 - 1/2 HARD'. HARDNESS ADDED		03/2002

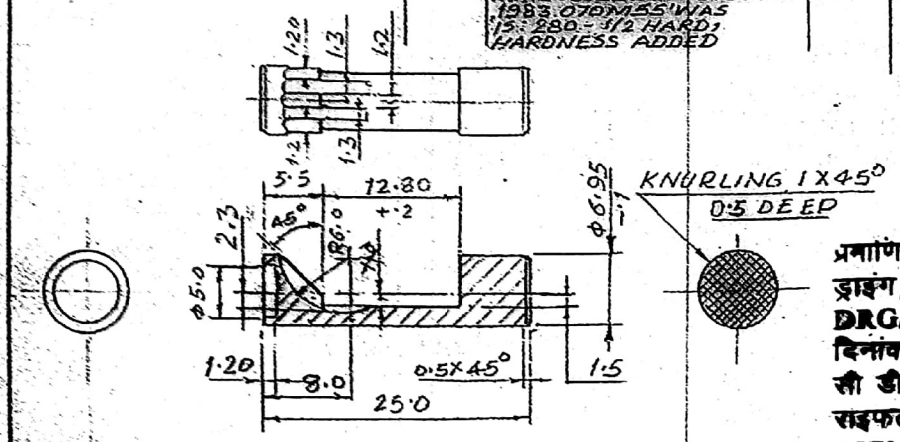

HOS/MPM

प्रमाणित प्रति / CERTIFIED COPY OF
ड्राइंग / लेआउट / गेज शिडयूल
DRG/LAYOUT/GAUGE SCHEDULE
दिनांक / AT THIS DATE 28/3/18
सी डी डी / CDD
राइफल फैक्टरी, ईशापुर
RIFLE FACTORY, ISHAPORE

MATL. STEEL BS: 970 Pt. 1 : 1983, 070M55
HRD. 300 - 350 HV
FINISH - PHOSPHATED TO SPEC N. WPN/GEN/3 CLASS II
OIL FINISH

DATE	AMMENDMENT	SIG.	DA. NO.
24-1-82	DIMN. 1.0 DELETED. DIMN 2.3 & 8.0 ADDED. ENLARGED VIEW ADDED.		14/2002

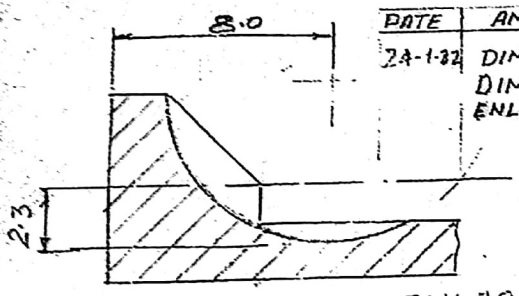

ENLARGED VIEW

GM/REF

प्रमाणित की गयी प्रतिलिपि
प्रतिलिपि दिनांक 13/11/13
Certified as correct copy of drg. no.
13/11/13
Jr. Works Manager

DIMENSIONS ARE IN m.m.
IMPT. DIMNS. ARE MARKED THUS '⊕'
INFORMATION MKD. THUS 'I' TO BE MKD. ON SURFACES MKD. 'G' TO BE GRD.
(ASSY. DRG. NO. RF/K/002/3)

RIFLE 7.62 mm L.P.
PLUNGER

DRAWN	TRACED	CHKD.
DATE		

APPROVED
29/11/2000
J.W.M./D.O.

SCALE	SMALL ARMS FACTORY, KANPUR.	DRG. NO.
2:1		AR/01/26
		SHEET 1 OF 1

REF. DRG NO. RF/R/037