DRAWING NUMBER
306-89

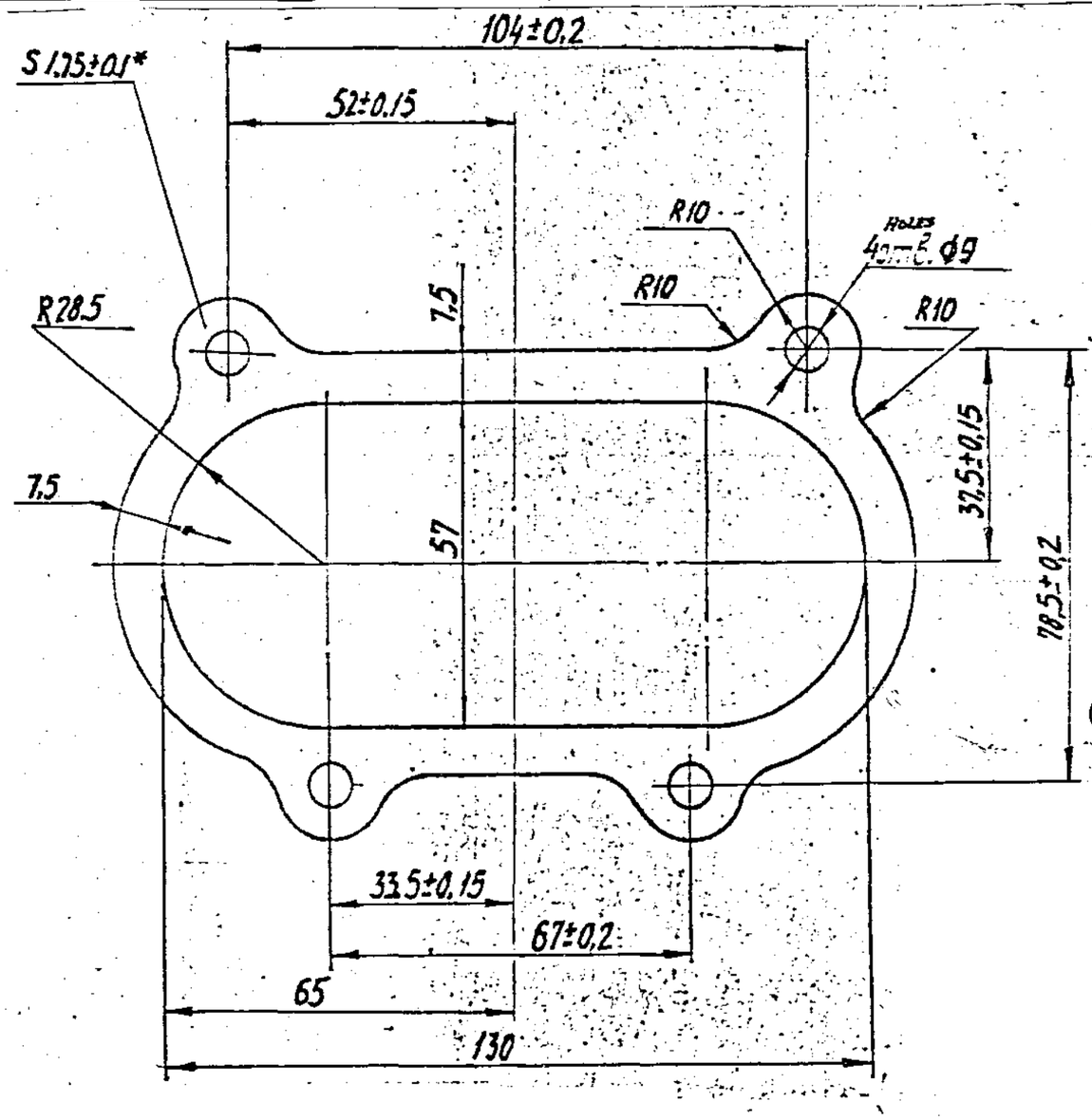

1. Неуказанные предельные отклонения размеров ±0,5мм
2. На кромках контура зазубрины, разрывы и заусенцы не допускаются.
3. Прокладки подбирать комплектно по 12 штук с разномерностью не более 0,1мм.
4. Заменитель материала: паронит ПОН2 ГОСТ 481-80; в тропическом исполнении паронит ПОНТ2 ГОСТ 481-80.
5. Детали в тропическом исполнении маскировать желтой краской в виде буквы Т.
6. * Размер для справок.

1. UNSPECIFIED LIMIT DEVIATIONS OF DIMENSIONS ± 0.05 mm.
2. NOTCHES, BREAKAGES AND BURRS ARE NOT PERMISSIBLE ALONG PROFILE EDGES.
3. GASKETS SHOULD BE SELECTED TO MAKE UP A SET OF 12 Pcs. WITH DIFFERENCE IN MEASURMENTS NOT EXCEEDING 0.1 mm.
4. ~~ALTERNATE MATERIAL : RUBBERIZED ASBESTOS FABRIC ПОН2 GOST 481-80, IN TROPICALIZED CONSTRUCTION, RUBBERIZED ASBESTOS FABRIC ПОНТ2 GOST 481-80.~~ (3A)
5. COMPONENTS OF TROPICALIZED CONSTRUCTION DESIGNATED BY LETTER 'T' SHOULD BE MARKED WITH YELLOW PAINT.
6. *DIMENSION FOR REFERENCE.

Material : - Steel Reinforced Asbestos
SHEET ЛА-1 1,75 GOST 12856-75

DRN		~~MATERIAL : ASBESTOS SHEET ЛА-1 1,75 GOST 12856-75~~	USED ON СБ406-12-44 СБ 406-13-44	
CHD				
TCD				
APPD				
DATE	04-01-89	CONTROLLERATE OF QUALITY ASSURANCE(HEAVY VEHICLES) AVADI		
SCALE:- 1:1				
DIMENSIONS IN mm TOLERANCE ON DIMNS UNLESS OTHERWISE STATED IS:2102-69		TITLE GASKET		
ALL THREADS TO CONFORM TO		D S CAT NUMBER	DRAWING NUMBER 306-89	

PILOT SAMPLE SHOULD BE APPROVED BY A H S P BEFORE BULK PRODUCTION

EST. WT. 0.015 Kg.

TO BE STAMPED OR MARKED WHERE INDICATED THUS # (LETTERS)

ALL SHARP EDGES AND CORNERS TO BE REMOVED UNLESS OTHERWISE STATED MACHINED CORNERS TO HAVE R OUT SIDE R INSIDE EQUIVALENT CHAMFERS ARE PERMISSIBLE.

ISSUE	DATE	NATURE OF AMENDMENTS
3A	20.8.10	4th Alt. Comm. Meeting Minutes Point.No.18 Dt.26.10.09

ORG. INDIANISED BASED ON RUSSIAN ORIGINAL ISSUE No: 3 (BK 82-437)

A-5

SIZE A3

DRAWING NUMBER
319-08-2

Rz320 (V)

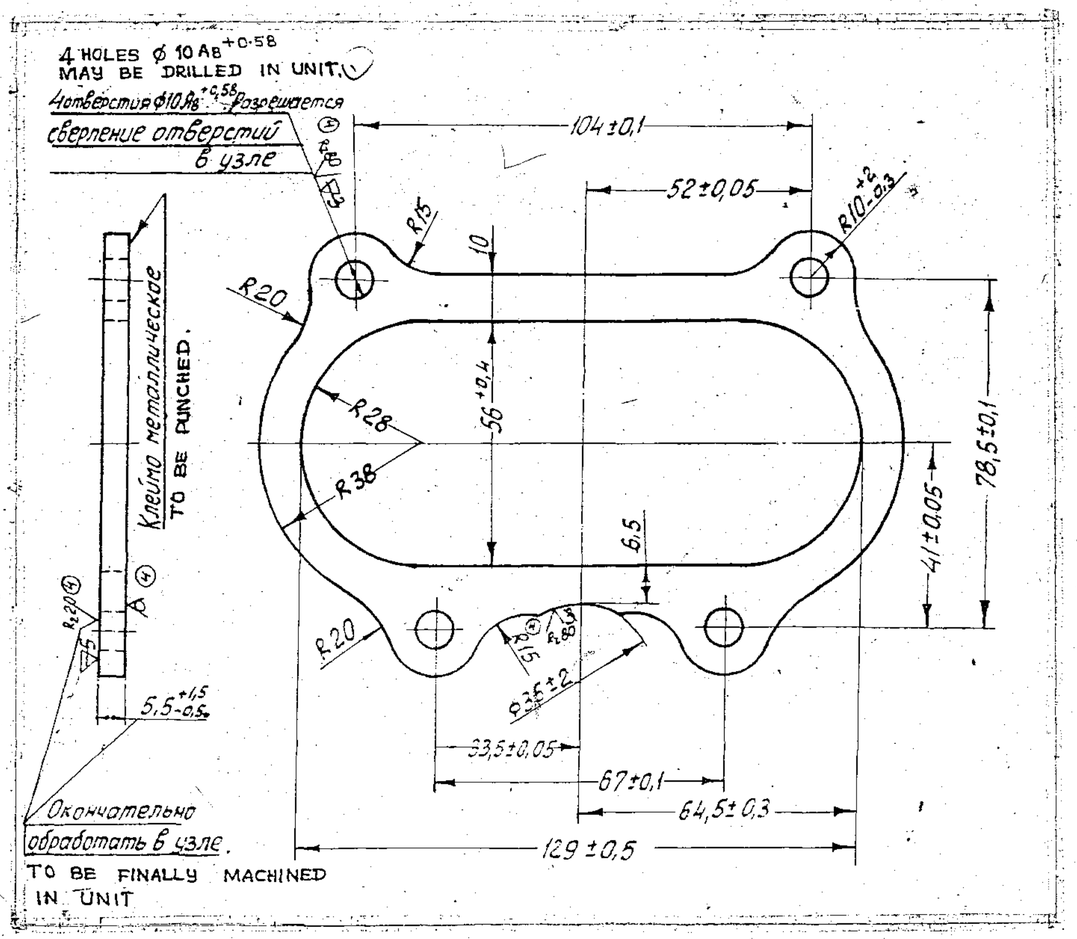

EXPLANATORY NOTE :

6. REFERENCE MATERIAL QUOTED: HOT ROLLED STEEL SHEET OF NORMAL ACCURACY ON ROLLING 'B' 8mm THICKNESS TO GOST 19903-74 STEEL Gde 20 OF GOST 1577-81 MANUFACTURED IN ACCORDANCE WITH NORMALISED CARBON STRUCTURAL STEEL Gde 20 AND REFERENCE NOTE 5 ON ALTERNATE MATERIALS MANUFACTURED IN ACCORDANCE WITH CARBON STRUCTURAL STEEL Gdes. 10,15 & 25 TO GOST 1050-74.

a) CHEMICAL COMPOSITION AS PER GOST 1050-74

GRADE OF STEEL	CONTENT OF ELMENTS %						REMARKS
	C	Si	Mn	Cr	S	P	
				MAXIMUM			
20	0.17-0.24	0.17-0.37	0.35-0.65	0.25	0.040	0.035	Ref.Matl.
10	0.07-0.14	0.17-0.37	0.35-0.65	0.15	0.040	0.035	Ref.Matl.
15	0.12-0.19	0.17-0.37	0.35-0.65	0.25	0.040	0.035	Ref.Matl.
25	0.22-0.30	0.17-0.37	0.50-0.80	0.25	0.040	0.035	Ref.Matl.

RESIDUAL CONTENT OF COPPER AND NICKEL SHOULD NOT EXCEED 0.25% EACH

b) MECHANICAL PROPERTIES OF NORMALISED HOT ROLLED SHEET AS PER GOST 1577-81.

GRADE OF STEEL	ULTIMATE TENSILE STRENGTH Kgf/mm²	ELONGATION %	IMPACT STRENGTH Kgcm/cm²	HARDNESS B.H.N.	REMARKS
	MINIMUM			MAX	
20	42	28	3	-	Ref.Matl.
10	34	32	3	-	Alt.Matl.
15	38	30	3	-	Alt.Matl.
25	45	25	—	170	Alt.Matl.

ALTERNATE

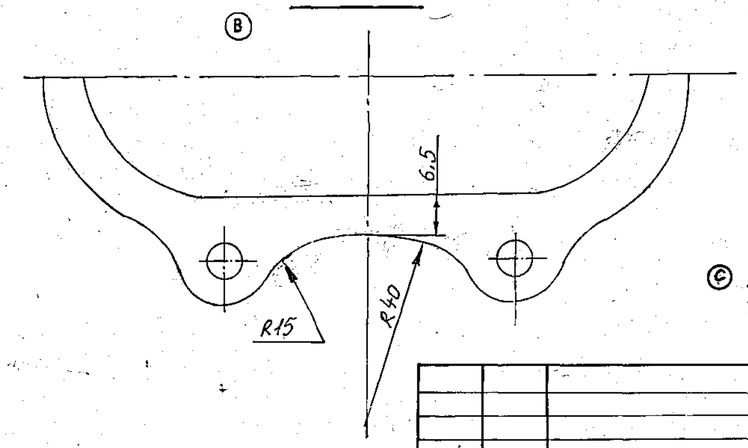

1. REQUIREMENTS FOR STAMPING AS PER STANDARD 82050-16.
2. DIMENSIONS WITH UNSPECIFIED TOLERANCES SHOULD BE MAINTAINED AS PER ACCURACY CLASS 7 OST 1010.
3. SHARP EDGES SHOULD BE BLUNTED.
4. BLANKING BEVEL UPTO 0.8mm IS PERMISSIBLE.
5. ALTERNATE MATERIAL : STEEL 10,15,AND 25 GOST 1050-74.

© ALTERNATE MATERIAL STEEL 070M20 (EN3A) TO BS: 970- Pt-I- 1983 (OR) 20 C8 TO IS: 1570

PILOT SAMPLE SHOULD BE APPROVED BY A H S P BEFORE BULK PRODUCTION.

EST WT.	TO BE STAMPED OR MARKED WHERE INDICATED THUS # (LETTERS)
0.26 Kg.	

ALL SHARP EDGES AND CORNERS TO BE REMOVED UNLESS OTHERWISE STATED MACHINED CORNERS TO HAVE R OUTSIDE R INSIDE EQUIVALENT CHAMFERS ARE PERMISSIBLE

ISSUE	DATE	NATURE OF AMENDMENTS
C	27-5-09	3rd ALTERATION COMM. MINUTES POINT 4 DATE 27-2-09
B	20.9.89	AUTHY. No. BK 84-915.
A	15.10.87	AUTHY. NOTN. No. BK 83-151

DRN	
CHD	
TCD	
APPD	
DATE	06-3-86
SCALE	1 : 1
DIMENSIONS IN mm	
TOLERANCE ON DIMNS UNLESS OTHERWISE STATED IS : 2102-69	
ALL THREADS TO CONFORM TO	

MATERIAL
SHEET B8 GOST19903-74 (A)
20 GOST 1577-~~70~~ 81

USED ON
CB 419-05-7
CB 419-06-7

CONTROLLERATE OF INSPECTION (HEAVY VEHICLES) AVADI

TITLE
FLANGE MANIFOLD

D S CAT NUMBER

DRAWING NUMBER
319-08-2

DRAWING NUMBER
319-62

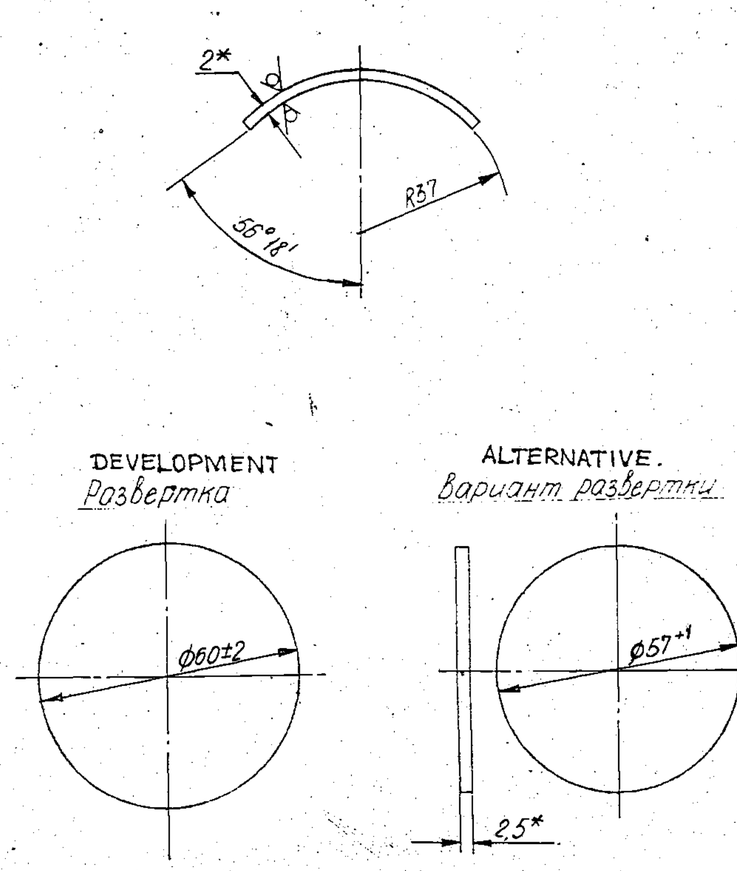

EXPLANATORY NOTE

5. REFERENCE MATERIAL QUOTED

COLD ROLLED SHEET STEEL 2mm THICK TO GOST 19904-74 ORDINARY SURFACE FINISH TO 10кп TO GOST16523-70 AND MANUFACTURED IN ACCORDANCE WITH QUALITY CARBON STRUCTURAL STEEL Gde 10Kп AND REFERENCE NOTE 2: ON ALTERNATE MATERIAL, STEEL GRADES10,20,08Kп,15Kп AND 08пс TO GOST 1050-74

a) CHEMICAL COMPOSITION AS PER GOST 1050-74

GRADE OF STEEL	CONTENT OF ELEMENTS %						REMARKS
	C	Si	Mn.	Cr	S	P	
				MAXIMUM			
10кп	0.07-0.14	max 0.07	0.25 0.50	0.15	0.040	0.035	Ref. Matl.
10	0.07-0.14	0.17-0.37	0.35-0.65	0.15	0.040	0.035	Alt.Matl.
20	0.17-0.24	0.17-0.37	0.35-0.65	0.25	0.040	0.035	Alt. Matl.
08кп	0.05-0. 11	max 0.03	0.25 0.50	0.10	0.040	0.035	Alt. Matl.
15кп	0.12-0.19	max 0.07	0.25-0.50	0.25	0.040	0.035	Alt.Matl.
08пс	0.05 0.11	0.05 0.17	0.35 0.65	0.10	0.040	0.035	Alt.Matl.

RESIDUAL CONTENT OF COPPER AND NICKEL SHOULD NOT EXCEED 0.25% EACH. MANGANESE CONTENT UPTO 0.25% AS REGARDS LOWER LIMIT IS ALLOWED IN THE STEEL Gde. 08пс MEANT FOR PRODUCTION OF SHEET STEEL FOR COLD STAMPING.

b) MECHANICAL PROPERTIES AS PER GOST 16523-70.

GRADE OF STEEL	ULTIMATE TENSILE STRENGTG Kgf/mm²	RELATIVE ELONGATION %	REMARKS
10Kп	28-40	25	Ref.Matl.
10	30-42	25	Alt.Matl.
20	36-51	23	Alt.Matl.
08кп	27-39	26	Alt.Matl.
15Kп	32-45	24	Alt.Matl.
08пс	28-40	25	Alt.Matl.

1. REQUIREMENTS FOR STAMPING AS PER STANDARD 82050-16.
2. ALTERNATE MATERIAL: STEEL 10,20,08Kп, 15Kп,08пс GOST 1050-74, 08 ПО GOST 9045-80. (A)
3. DRAFT UP TO 1mm PER SIDE IS PERMISSIBLE.
4. * DIMENSIONS FOR REFERENCE.

(B) EQUIVALENT MATERIAL Gr. D IS:513-1994.

PILOT SAMPLE SHOULD BE APPROVED BY A H S P BEFORE BULK PRODUCTION.

EST WT	TO BE STAMPED OR MARKED WHERE INDICATED THUS # (LETTERS)
0.056 Kg	

ALL SHARP EDGES AND CORNERS TO BE REMOVED UNLESS OTHERWISE STATED MACHINED CORNERS TO HAVE R OUTSIDE R INSIDE EQUIVALENT CHAMFERS ARE PERMISSIBLE

ISSUE	DATE	NATURE OF AMENDMENTS
B	1-7-10	4th ALT. COMM. Mtg. MINUTES POINT No. 2 DATE 26.10.09
A	26.10.88	AUTHY 85-733

DRN
CHD
TCD
APPD
DATE 06-3-16
SCALE 1 : 1
DIMENSIONS IN mm
TOLERANCE ON DIMNS UNLESS OTHERWISE STATED IS : 2102-69
ALL THREADS TO CONFORM TO

MATERIAL SHEET 2 GOST 19904-74 10Kп GOST 16523-70

USED ON TB 419-06-7 -05-7

CONTROLLERATE OF INSPECTION (HEAVY VEHICLES AVADI)

TITLE
COVER PLATE MANIFOLD

D S CAT NUMBER

DRAWING NUMBER 319-62

DRAWING NUMBER 319-67-16 | SHEET No. 1 OF 1

80 (V)

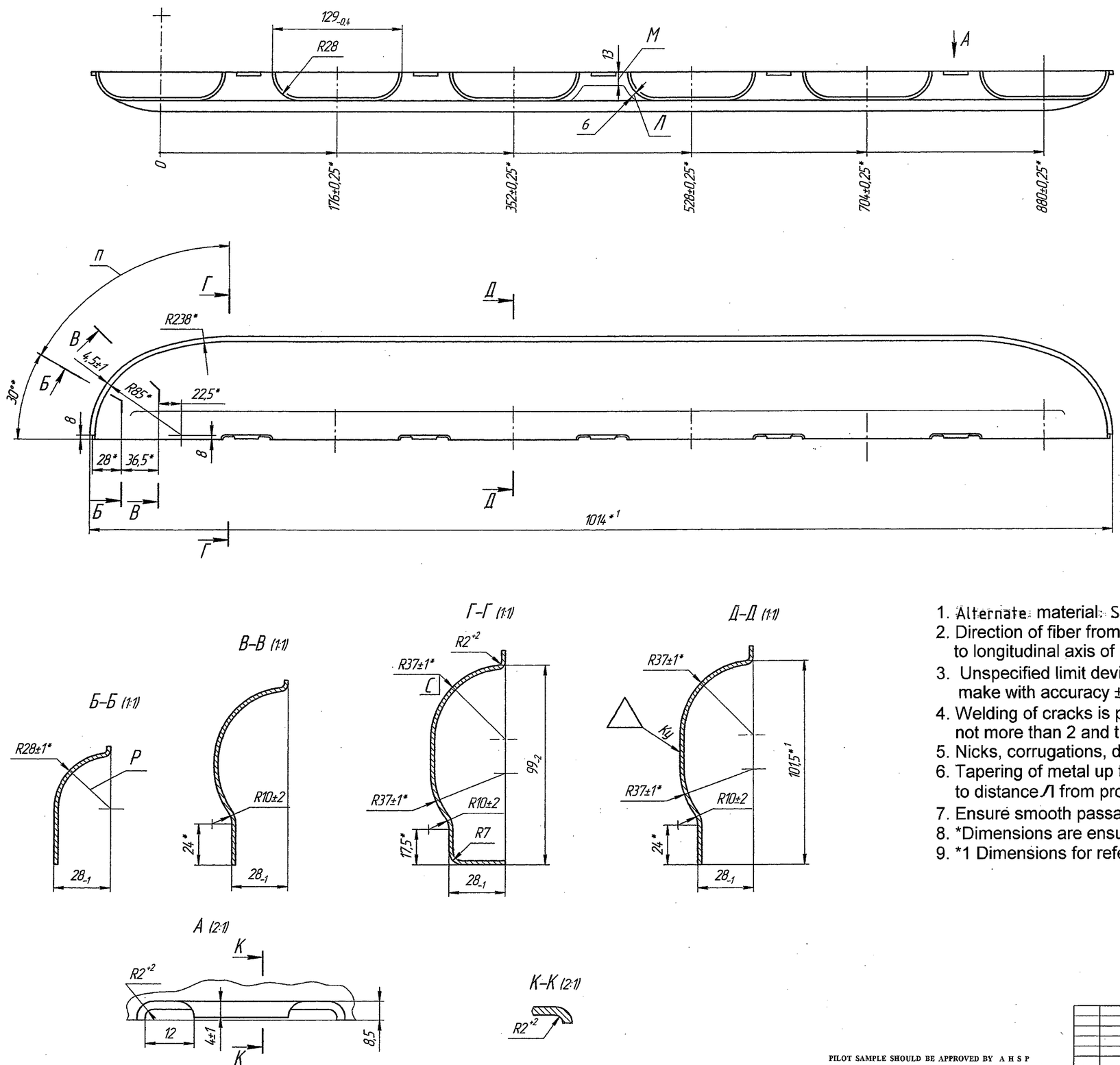

1. Alternate material: Steel 08Ю GOST 9045-93.
2. Direction of fiber from roll of sheet should be perpendicular to longitudinal axis of part.
3. Unspecified limit deviation of dimensions for cold stamping, make with accuracy ± 0.5 mm.
4. Welding of cracks is permitted in the case if number of cracks not more than 2 and thickness of metal near to crack not more than 1.5 mm.
5. Nicks, corrugations, dents and other defects are not permitted.
6. Tapering of metal up to 1.2 mm to distance M from plane of joint and to distance Л from profile of branch pipe is permitted.
7. Ensure smooth passage of dimension P in dimension C on section П.
8. *Dimensions are ensured by tool.
9. *1 Dimensions for reference

Ⓐ EQUIVALENT MATERIAL Gr. D IS : 513-1994

PILOT SAMPLE SHOULD BE APPROVED BY A H S P BEFORE BULK PRODUCTION.

EST. WT. (Kg)	TO BE STAMPED OR MARKED WHERE INDICATED THUS # (LETTERS)
2.0	

ALL SHARP EDGES AND CORNERS TO BE REMOVED UNLESS OTHERWISE STATED MACHINED CORNERS TO HAVE R OUTSIDE R INSIDE EQUIVALENT CHAMFERS ARE PERMISSIBLE.

ISSUE	DATE	NATURE OF AMENDMENTS
A	10.03.10	4th Alt.Comm.Mt.Minutes Pt.No.1 Dt.26.10.09

DRN	
CHD	
APPD	
DATE	4-2-09
SCALE:- 1:2	
DIMENSIONS IN mm	
TOLERANCE ON DIMNS UNLESS OTHERWISE STATED IS : 2102-69	
ALL THREADS TO CONFORM TO	

MATERIAL :- Sheet AT-2 GOST 19904-90 / II-ВГ-08кп GOST 9045-93

USED ON :- Cb. 419-05-19, Cb. 419-06-19

CONTROLLERATE OF QUALITY ASSURANCE (HEAVY VEHICLES) AVADI

TITLE :- INLET MANIFOLD HALF

D S CAT NUMBER

DRAWING NUMBER 319-67-16

DRAWING INDIANISED BASED ON RUSSIAN ORIGINAL ISSUE - I
DRAWING REPLACES 909-67-16 ISSUE-NIL NOTN. No. 408-03

F-158

SIZE A1

319-67-17

80

1. Неуказанные предельные отклонения размеров на холодную штамповку выполнять с точностью ±0,5мм.
2. Пробоины, гофр, вмятины и прочие дефекты не допускаются.
3. *Размеры обеспечить инструментом и проверить по сопрягаемой детали.
4. *1 Размеры для справок.

1. Unspecified limit deviations of dimensions for cold forging is carried out with accuracy ± 0.5 mm.
2. Holes, corrugations, dents and other defects are not permitted.
3. * Ensure the dimensions by tools and check as per mating parts.
4. *1 Dimensions for references.

FOR DIMENSION DETAILS REFER ASSEMBLY DRAWING (SB 419-05/06 -19)

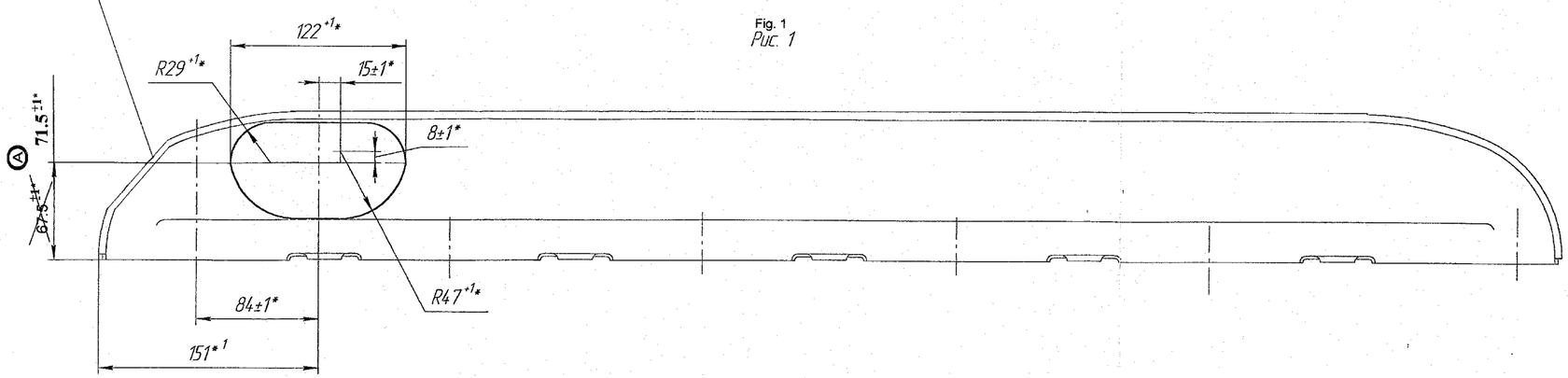

Fig. 1
Рис. 1

Figure 2

Рис. 2

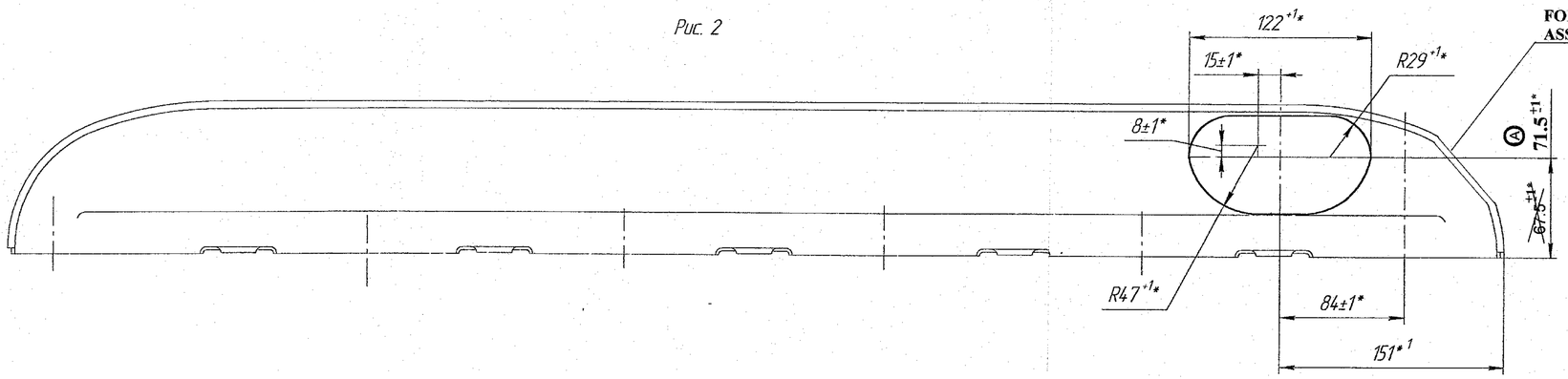

FOR DIMENSION DETAILS REFER ASSEMBLY DRAWING (SB 419-05/06 -19)

ASSEMBLY DRAWING (SB 419-05/06-19)

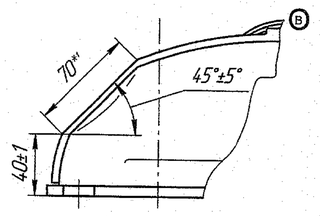

Code	Figure
Обозначение	Рис.
319-67-17	1
319-67-17-01	2

29.11.08.

B	409-03	Dt.23-09-08	HALF INLET MANIFOLD	
A	408-03		319-67-17	Letter / Weight / Scale
Изм	Лист	№ докум.	Подп.	Дата	Половина коллектора впускного	Лит. 0	Масса ~1,915	Масштаб 1:2
Trans. & Ckd. by : M/s SWYAZ						Лист	Листов 1
Authenticated by :					Blank Заготовка 319-67-16	Sheet	Sheets 4/89
Approved by :							
Engine Factory, Avadi							

Инв. № подл. | Подп. и дата | Взам. инв. № | Инв. № дубл. | Подп. и дата

DRAWING NUMBER
351 - 02

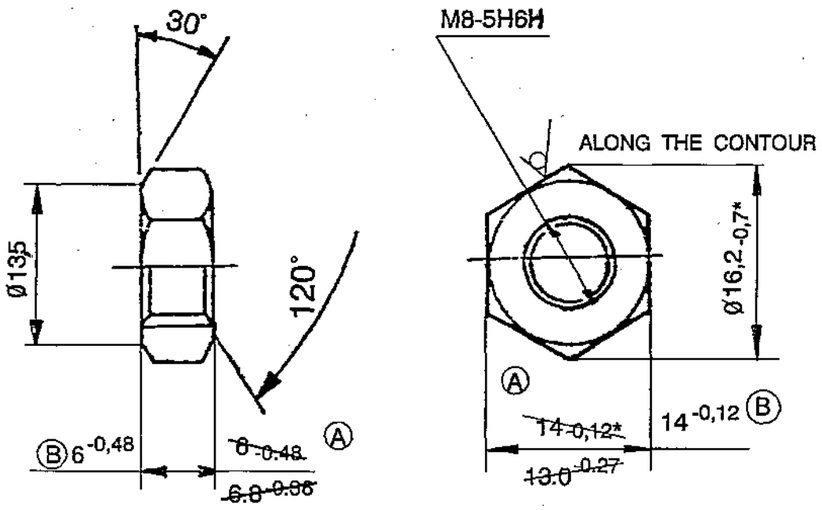

1. ROLLED STOCK OF GROUP B CLASS 4 GOST 1051-73 MAY BE USED TO ENSURE HIGH QUALITY OF COATING, IT IS ALLOWED TO ELIMINATE SURFACE DEFECTS OF ROLLED STOCK WITH DECREASE OF DIMENSIONS AS PER ACCURACY CLASS 5.
2. ~~ALTERNATE MATERIAL :- STEEL GRADES 40 AND 50 GOST 1050 - 74.~~
3. THE REST OF THE TECHNICAL REQUIREMENTS AS PER STANDARD 82052 - 00.
5. COATING :- Cd 3, CHROMATIZING AS PER UU-104 WITH ELIMINATION OF HYDROGEN EMBRITTLEMENT.
6. *DIMENSIONS FOR REFERENCE.

Ⓓ Material: STEEL 709M40 (EN-19) TO BS-970 Pt-I-1983

EXPLANATORY NOTE :

Rz40 (✓)

7. MATERIAL QUOTED :- HEXAGON BAR 14-4 GOST 8560-78 / 45-Б GOST 1051-73

Ⓓ BRIGHT STEEL OF HEXAGONAL CROSS SECTION 14mm ACROSS FLAT, ACCURACY CLASS - 4 TO GOST 8560-78. AND MANUFACTURED FROM COLD DRAWN SIZED STEEL OF GROUP Б SURFACE QUALITY TO GOST 1051-73.
ALTERNATE MATERIAL QUOTED :- STEEL GRADE 40 & 50 TO GOST 1050-74.

CHEMICAL COMPOSITION :

STEEL GRADE	CONTENT OF ELEMENTS %							
	C	Si	Mn	Cr(max)	S	P	Ni	Cu
					MAXIMUM			
40	0.37-0.45	0.17-0.37	0.50-0.80	0.25	0.040	0.035	0.10	0.15
45	0.42-0.50	0.17-0.37	0.50-0.80	0.25	0.040	0.035	0.10	0.15
50	0.47-0.55	0.17-0.37	0.50-0.80	0.25	0.040	0.035	0.10	0.15

MECHANICAL PROPERTIES :

STEEL GRADE	YIELD POINT Kgf/mm² (min)	ULTIMATE TENSILE STRENGTH Kgf/mm² (min)	PERCENTAGE ELONGATION (min)	REDUCTION OF AREA % (min)	IMPACT STRENGTH Kgfm/cm² (min)
40	34	58	19	45	6
45	36	61	16	40	5
50	38	64	14	40	4

USED ON:-
Ⓒ Cb 20-01-00-8, Cb 20-06-12-6, Cb 20-06-13-6, Cb 20-09-07, Cb 20-19-00-1, Cb 20-11-00-6, Cb 20-12-00-13, Cb 20-13-01-8, Cb 20-20-00-10, Cb 20-22-00-7, Cb 20-08-00-7, Cb 3301-00-37, Cb 306-01-20, Cb 306-02-20, Cb 306-03-3, Cb 306-04-2, Cb 321-04-4, Cb 447-01-1, Cb 421-04-3, Cb 421-18-1, Cb 3301-00-44, Cb 3301-15-44, Cb 306-01-36, Cb 306-02-36, Cb 3308-15-2, Cb 3312-90-14, Cb 419-00-20, Cb 3320-00-43, Cb 315-663-33, Cb 3334-02-10, Cb 3336-00-11, Cb 337-100, Cb 3342-00-21

Cb 406-12-44
Cb 406-13-44
Cb 20-27-00-4
Cb 20-15-663-4
Cb 3342-00-8cb
Cb334-73-1
Cb3334-02-3
Cb327-145-10
Cb327-145-15
Cb315-663-21

D	18.5.09	Authy: Third Alt. Comm. Minutes Point: 5 Dated 27-02-2009.		
C	25.8.08	USED ON NUMBER ADDED		
B	24-12-07	ALT. COMMITTEE MEETING MINUTES. POINT No. 2.18 Dt. 18-12-2007.		
A	15-03-04	AUTHY. Lt. No.110094/IND-III /577, Dt. 19-02-04.		
ISSUE	DATE	NATURE OF AMENDMENTS		

DRN	Sd/=
CHD	Sd/=
TCD	Sd/=
APPD	Sd/=
DATE	08-05-86
SCALE:-	2 : 1
DIMENSIONS IN mm	
TOLERANCE ON DIMNS UNLESS OTHERWISE STATED IS : 2102 - 69	
ALL THREADS TO CONFORM TO	

MATERIAL :-
Ⓓ ~~14-4 GOST 8560-78~~
~~45-b GOST 1051-73~~

CONTROLLERATE OF QUALITY ASSURANCE (HEAVY VEHICLES)
AVADI

TITLE :-
NUT M8

D S CAT NUMBER

DRAWING NUMBER
351 - 02

PILOT SAMPLE SHOULD BE APPROVED BY A H S P BEFORE BULK PRODUCTION.

EST. WT. 0,0055 Kg

TO BE STAMPED OR MARKED WHERE INDICATED THUS # (LETTERS)

ALL SHARP EDGES AND CORNERS TO BE REMOVED UNLESS OTHERWISE STATED MACHINED CORNERS TO HAVE R OUTSIDE R INSIDE EQUIVALENT CHAMFERS ARE PERMISSIBLE.

SIZE A3

COMMON TO V-92S2 & UTD-20 ENGINES
DRG. INDIANISED BASED ON RUSSIAN ORIGINAL ISSUE - NIL

(B. JAYAVELU)
JTO (D)

DRAWING NUMBER
353-24

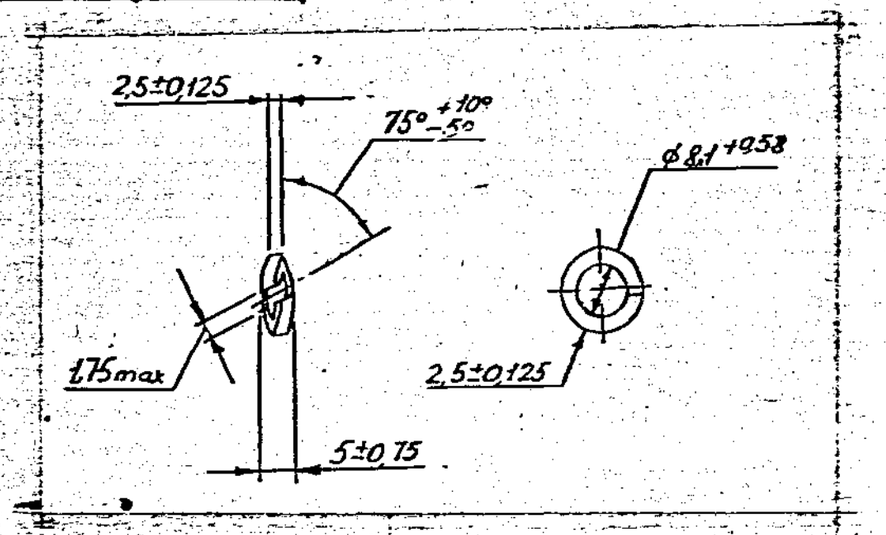

2. COATING ; CADMIUM 9, CHROMATIZING, AS PER ГОСТ 9.104 WITH ELIMINATION OF HYDROGEN EMBRITTLEMENT.

3. WASHER 8T 65Г 09 GOST 6402-70 MAY BE USED.

PILOT SAMPLE SHOULD BE APPROVED BY A H S P BEFORE BULK PRODUCTION.

COMMON TO V-9252 & UTD-20 ENGINES

A-8

EXPLANATORY NOTE:

MATERIAL QUOTED: WASHER 8T. 65Г. 06 GOST 6402-70.
ALT. MAT. QUOTED: WASHER 8T. 65Г. 09 GOST 6402-70.
CORRESPONDS DESIGN AND DIMENSIONS OF SPRING (LOCK) WASHERS.

06 = CONVENTIONAL SYMBOL OF FINISH. (PARKERISING FOLLOWED BY OILING).
09 = ZINC PLATING
T = HEAVY ; 65Г = GRADE OF STEEL AS PER GOST 1050-74.
(65G)

CHEMICAL COMPOSITION: AS PER GOST 1050-74.

CONTENT OF ELEMENTS %							
C	Si	Mn	Cr	S	P	Cu	Ni
			MAXIMUM				
0.62 – 0.70	0.17 – 0.37	0.90 – 1.20	0.25	0.040	0.035	0.25	0.25

WEIGHT OF STEEL WASHERS AND THEIR RESILIENCE PROPERTIES AS PER GOST 6402-70.

THEORETICAL WEIGHT OF 1000 STEEL WASHERS IN kg = 1.638

ESTIMATED RESILIENCE OF WASHERS FROM STEEL GRADE 65G IN kg = 66.4

MECHANICAL PROPERTIES: AS PER GRADE 65G GOST 1050-74.

YIELD POINT kgf/mm² (MIN) = 44

ULTIMATE TENSILE STRENGTH (MIN) kgf/mm² = 75

ELONGATION % (MIN) = 9

(B) EQUIVALENT MATERIAL
75 C6 TO IS:2507/EN 42 J BS:970

Cb 20-06-18-6, Cb 20-06-13-6

B	16.8.10	4th Alt.Comm.Meeting Minutes Point No:12 Dt: 26-10-09	
A	28-8-08	USED ON NUMBER ADDED	
ISSUE	DATE	NATURE OF AMENDMENTS	
DRN		SCALE : 1 : 1	
CHD		DIMENSIONS IN mm	
TCD		TOLERANCE ON DIMNS UNLESS OTHERWISE STATED	
APPD		ALL THREADS CONFORM TO	
DATE			

EST WT 1.630 kg 1000 PIECES

TO BE STAMPED OR MARKED WHERE INDICATED THUS # (LETTERS)

ALL SHARP EDGES AND CORNERS TO BE REMOVED UNLESS OTHERWISE STATED MACHINED CORNERS TO HAVE R OUTSIDE R INSIDE EQUIVALENT CHAMFERS ARE PERMISSIBLE.

MATERIAL 65Г06 GOST 6402-70

USED ON Cb 3342-00-8
Cb 334-73-1, Cb 3334-02-3
Cb3338-401-10

CONTROLLERATE OF INSPECTION (HEAVY VEHICLES) AVADI

TITLE WASHER 8 T

D S CAT NUMBER

DRAWING NUMBER 353-24

Cb 303-00-16 , Cb 406-12-44
Cb 406-13-44 Cb 3301-00-37
Cb 3301-15-30 , Cb 3308-00-17
Cb 3312-90-9 , Cb 3320-00-33
Cb 3321-00-16 ,
Cb 3301-00-44 , Cb 3301-15-44
Cb 406-12-75 , Cb 406-13-75
Cb 3308-15-2 , Cb 3312-00-22
Cb 3320-00-43 , Cb 3321-00-26
Cb 3334-00-47 , Eb 3334-02-10
Cb. 3336-00-11 , Cb 3342-00-21

Cb 345-00-4
Cb 447-00-1

(A) VARIOUS ASSEMBLIES OF UTD-20
Cb 20-01-00-8 , Cb 20-01-08-7
Eb 20-06-12-6 , Cb 20-06-13-6
Eb 20-13-01-8 , Cb 20-19-00-1
Cb 20-20-00-10 , Cb 20-22-00-7
Cb 20-63-00-5

DRAWING NUMBER	SHEET No. OF
419-44-2	

80

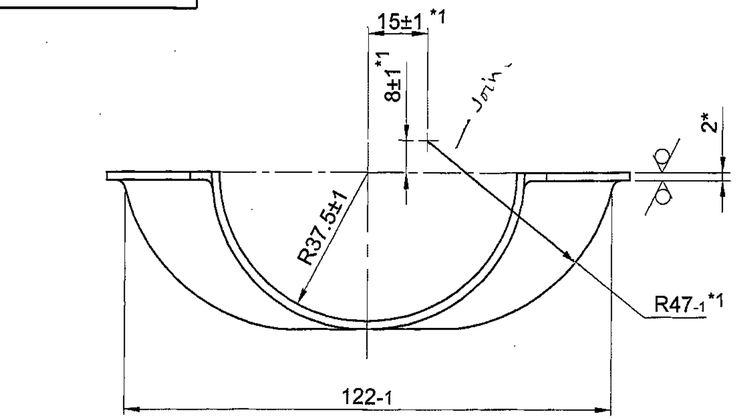

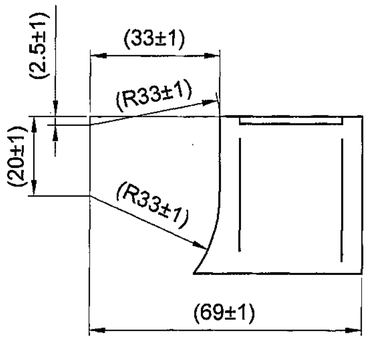

1. Dimensions are given in brackets - after assembly.
2. * Dimensions are given for reference.
3. *1 Dimensions are ensured with tool.

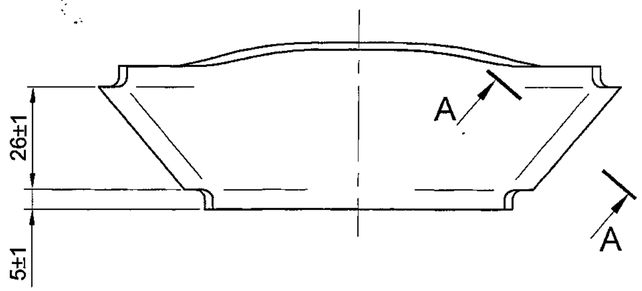

A - A

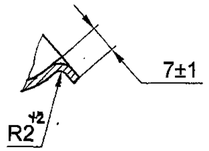

(B) EQUIVALENT MATERIAL
Gr D.D IS:513-1994

PILOT SAMPLE SHOULD BE APPROVED BY A H S P BEFORE BULK PRODUCTION.

EST. WT. (kg)	TO BE STAMPED OR MARKED WHERE INDICATED THUS # (LETTERS)
0.91	

ALL SHARP EDGES AND CORNERS TO BE REMOVED UNLESS OTHERWISE STATED MACHINED CORNERS TO HAVE R OUT-SIDE R INSIDE EQUIVALENT CHAMFERS ARE PERMISSIBLE.

ISSUE	DATE	NATURE OF AMENDMENTS
B	18.03.10	4th Alt.Comm.Mt.Minutes Pt.No.1 Dt.26.10.09
A	02-08-08	DO. CORRECTION

DRN		MATERIAL :- SHEET AT-2 GOST19904-90 II-BГ-08пс GOST9045-93
CHD		
APPD		
DATE	06/2/07	
SCALE:- 1 : 1		
DIMENSIONS IN mm		
TOLERANCE ON DIMNS UNLESS OTHERWISE STATED IS : 2102 - 69		
ALL THREADS TO CONFORM TO		

USED ON :- СБ 419 - 11 - 2

CONTROLLERATE OF QUALITY ASSURANCE (HEAVY VEHICLES) AVADI

TITLE :- (A) HALF OF BRANCH PIPE

D S CAT NUMBER

DRAWING NUMBER 419-44-2

DRAWING INDIANISED BASED ON RUSSIAN ORIGINAL ISSUE - NIL

F-4 83/253

SIZE A4 x 3

DRAWING NUMBER
419-45-2

SHEET No. OF

80

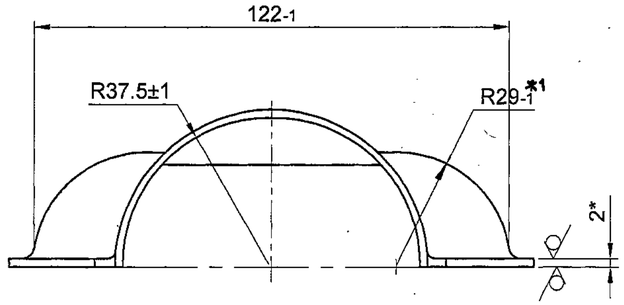

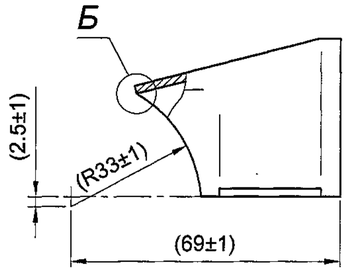

1. Dimensions are given in brackets - after assembly.
2. * Dimension is given for reference.
3. *1 Dimensions are ensured with tool.

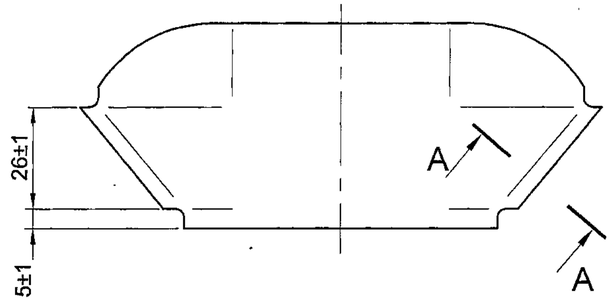

Б (5:1)

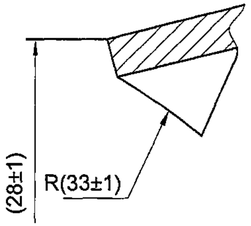

A - A

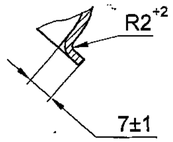

(B) EQUIVALENT MATERIAL
Gr. D DIS: 513-1994

PILOT SAMPLE SHOULD BE APPROVED BY A H S P BEFORE BULK PRODUCTION.

EST. WT. (kg)	TO BE STAMPED OR MARKED WHERE INDICATED THUS # (LETTERS)
0.141	

ALL SHARP EDGES AND CORNERS TO BE REMOVED UNLESS OTHERWISE STATED MACHINED CORNERS TO HAVE R OUT-SIDE R INSIDE EQUIVALENT CHAMFERS ARE PERMISSIBLE.

ISSUE	DATE	NATURE OF AMENDMENTS
B	16.03.10	4th Alt.Comm.Mt.Minutes Pt.No.1 Dt.26.10.09
A	02-08-08	DO. CORRECTION

DRN
CHD
APPD
DATE 08-2-08

SCALE:- 1 : 1

DIMENSIONS IN mm

TOLERANCE ON DIMNS UNLESS OTHERWISE STATED IS : 2102 - 69

ALL THREADS TO CONFORM TO

MATERIAL :- SHEET AT-2 GOST19904-90 II-BГ-08пс GOST9045-93

USED ON :- СБ 419-11-2

CONTROLLERATE OF QUALITY ASSURANCE (HEAVY VEHICLES) AVADI

TITLE :- HALF OF BRANCH PIPE (A)

D S CAT NUMBER

DRAWING NUMBER 419-45-2

DRAWING INDIANISED BASED ON RUSSIAN ORIGINAL ISSUE - NIL

F-4 86/253

SIZE A4 x 3

DRAWING NUMBER
419-46

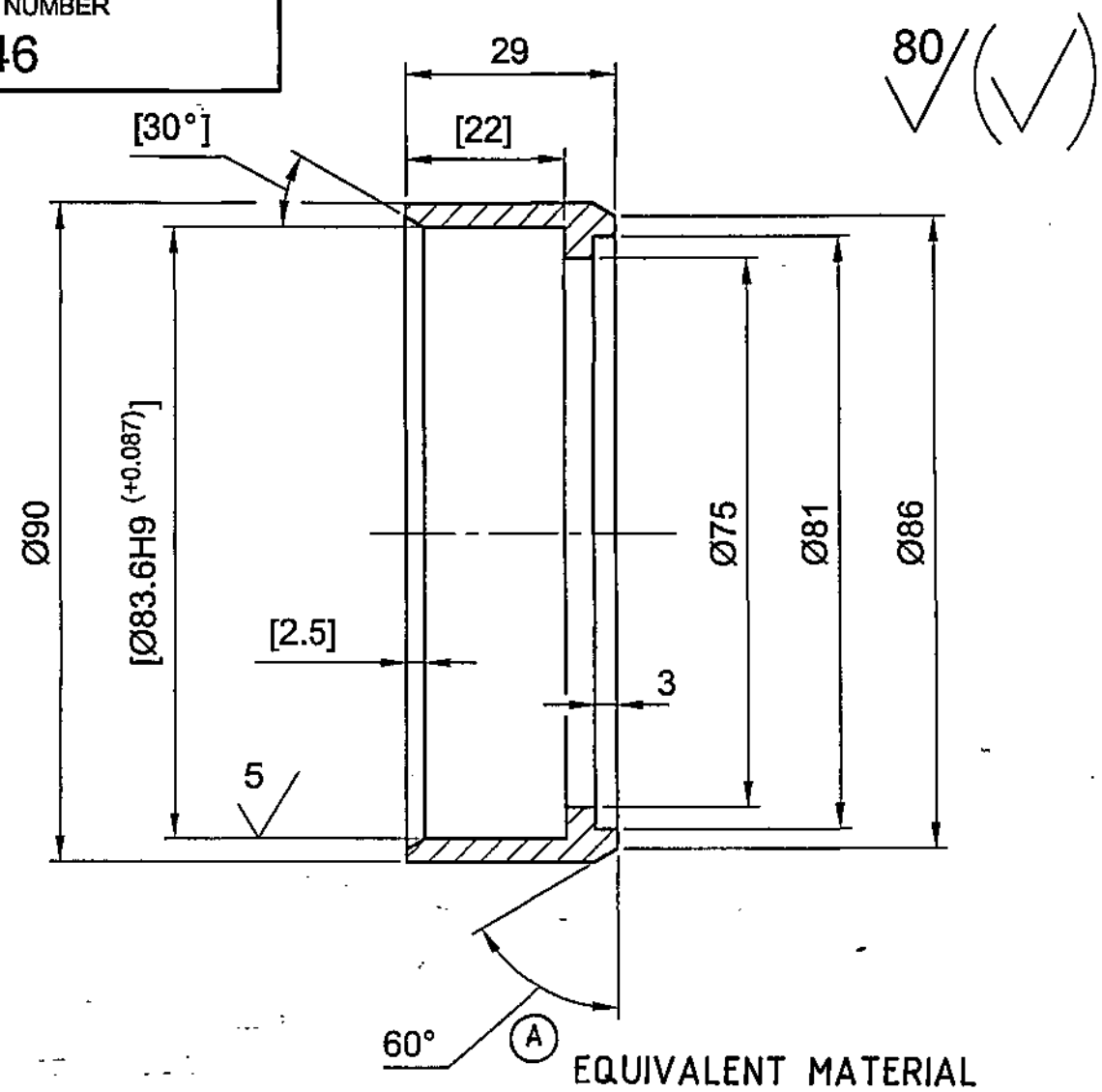

EQUIVALENT MATERIAL
040 A 04 (EN 2A) BS:970

1. H14, h14; $\pm \frac{IT14}{2}$.
2. Dimensions are given in brackets - after assembly.
3. Alternate material is steel 20 Gost 1050-88.

PILOT SAMPLE SHOULD BE APPROVED BY A H S P BEFORE BULK PRODUCTION.

DRAWING INDIANISED BASED ON RUSSIAN ORIGINAL ISSUE - 6

F-4 87/253

ISSUE	DATE	NATURE OF AMENDMENTS
A	29.04.10	4th Alt.Comm.Mt.Minutes Pt.No.2 Dt.26.10.09

EST. WT. (Kg) 0.197

TO BE STAMPED OR MARKED WHERE INDICATED THUS # (LETTERS)

ALL SHARP EDGES AND CORNERS TO BE REMOVED UNLESS OTHERWISE STATED MACHINED CORNERS TO HAVE R OUT-SIDE R INSIDE EQUIVALENT CHAMFERS ARE PERMISSIBLE.

MATERIAL :- STEEL 10 GOST1050-88.

USED ON :- Cb 419-11-2

DRN

CHD

APPD

DATE 26/11/09

SCALE :- 1 : 1

DIMENSIONS IN mm

TOLERANCE ON DIMENSIONS UNLESS OTHERWISE STATED IS : 2102 - 69

ALL THREADS TO CONFORM TO

CONTROLLERATE OF QUALITY ASSURANCE (HEAVY VEHICLES) AVADI

TITLE :- **RING**

D S CAT NUMBER

DRAWING NUMBER 419-46

SIZE A4

DRAWING NUMBER
3319-37

Rz80 (V)

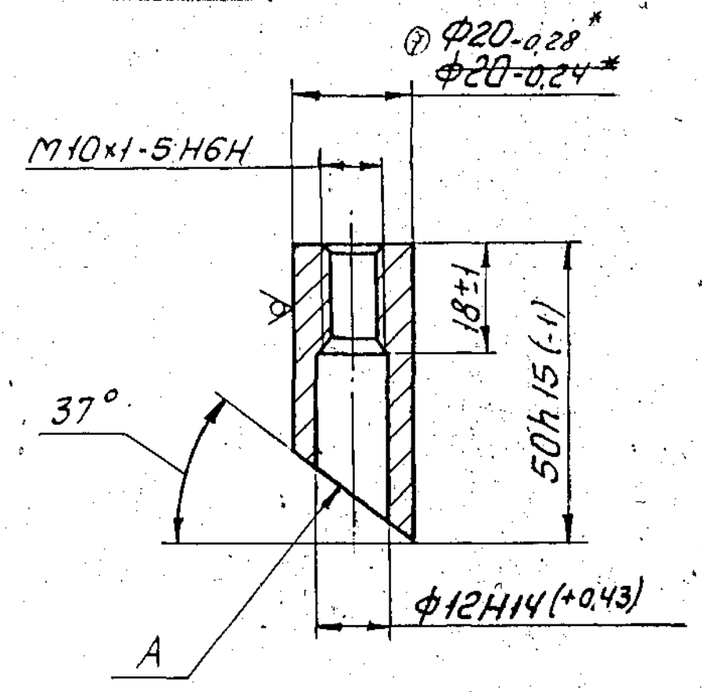

1. ALTERNATE MATERIAL:STEEL 15 AND 25 GOST 1050-74.
2. TECHNICAL REQUIREMENTS FOR THREAD AS PER STANDARD 82052-00.
3. BEFORE WELDING SURFACE A OF THE COMPONENT MAY BE ADJUSTED.
4. *DIMENSION FOR REFERENCE.

Ⓐ ALTERNATE MATERIAL STEEL 070M20 (EN3A) TO BS: 970 PT-I- 1983 (OR) 20 C8 TO IS 1570

EXPLANATORY NOTE :

5. REFERENCE MATERIAL QUOTED:-

COLD DRAWN STEEL ROUND BAR Φ 20mm TO GOST 7417-75, ACCURACY CLASS 5, SURFACE QUALITY 'B' TO GOST 1051-73 MANUFACTURED IN ACCORDANCE WITH QUALITY CARBON STRUCTURAL STEEL GRADE 20 AND REFERENCE NOTE'1' ON ALTERNATE MATERIAL STEEL GRADE 15 & 25 TO GOST 1050-74.

a) CHEMICAL COMPOSITION AS PER GOST 1050-74.

GRADE OF STEEL	CONTENT OF ELEMENTS %						REMARKS
	C	Si	Mn	Cr	S	P	
				MAXIMUM			
20	0,17-0.24	0.17-0.37	0.35-0.65	0.25	0.040	0.035	Ref.Matl.
15	0·12-0.19	0.17-0.37	0.35-0.65	0.25	0.040	0.035	Alt.Matl.
25	0.22-0.30	0.17-0.37	0.50-0.80	0.25	0.040	0.035	Alt.Matl.

RESIDUAL CONTENT OF COPPER AND NICKEL SHOULD NOT EXCEED 0.25% EACH

b) MECHANICAL PROPERTIES UNDER NORMALISED CONDITION AS PER GOST 1050

GRADE OF STEEL	TENSILE STREN-GTH Kgf/mm²	YIELD POINT Kgf/mm²	RELATIVE ELONGATION %	HARDNESS B.H.N.	REMARKS
	MINIMUM			MAX	
20	42	25	25	163	RefMatl
15	38	23	27	149	Alt.Matl
25	46	28	23	170	Alt.Matl

PILOT SAMPLE SHOULD BE APPROVED BY A H S P BEFORE BULK PRODUCTION.

EST WT	TO BE STAMPED OR MARKED WHERE INDICATED THUS II LETTERS I
0.07Kg.	

ALL SHARP EDGES AND CORNERS TO BE REMOVED UNLESS OTHERWISE STATED MACHINED CORNERS TO HAVE R OUT-SIDE R INSIDE EQUIVALENT CHAMFERS ARE PERMISSIBLE

ISSUE	DATE	NATURE OF AMENDMENTS
A	28-5-09	3rd ALTERATION COMM. MINUTES POINT 4 DATE 27-2-09

DRN	
CHD	
TCD	
APPD	
DATE	06-3-'86
SCALE : 1 : 1	
DIMENSIONS IN mm	
TOLERANCE ON DIMNS UNLESS OTHERWISE STATED IS : 2102-69	
ALL THREADS TO CONFORM TO IS 4218 PART IV	

MATERIAL ROUND BAR 20-5GOST7417-75 / 20 GOST 1051-73

USED ON CB 419-05-7, CB 419-06-7

CONTROLLERATE OF INSPECTION (HEAVY VEHICLES) AVADI

TITLE: BOSS

D S CAT NUMBER

DRAWING NUMBER 3319-37

SIZE A3

DRAWING NUMBER
3319-37-1

Rz80 (√)

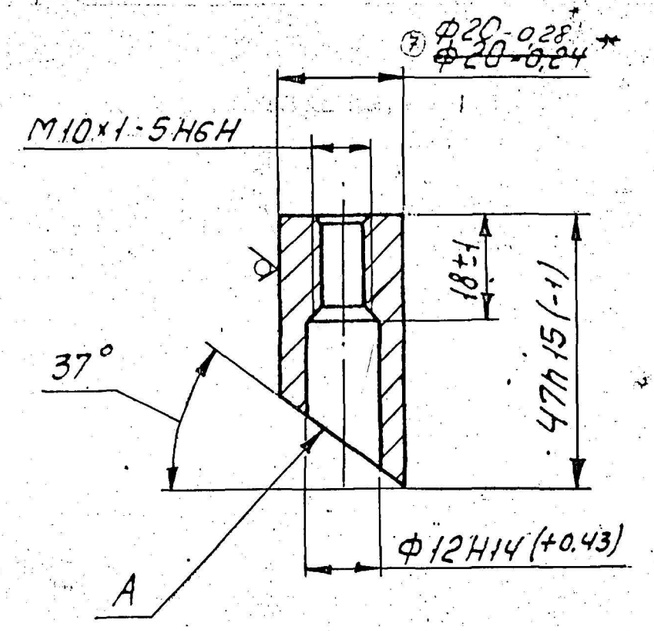

1. ALTERNATE MATERIAL:STEEL 15 AND 25 GOST 1050-74.
2. TECHNICAL REQUIREMENTS FOR THREAD AS PER STANDARD 82052.00
3. BEFORE WELDING SURFACE A OF THE COMPONENT MAY BE ADJUSTED.
4. *DIMENSION FOR REFERENCE.

(A)

(A) ALTERNATE MATERIAL STEEL 070M20 (EN 3A) TO BS: 970- Pt-I- 1983 (OR) 20 C8 TO IS 1570

EXPLANATORY NOTE :

5. REFERENCE MATERIAL QUOTED:

COLD DRAWN STEEL ROUND BAR Φ 20mm. TO GOST 7417-75. ACCURACY CLASS 5, SURFACE QUALITY 'B' TO GOST 1051-73 MANUFACTURED IN ACCORDANCE WITH QUALITY CARBON STRUCTURAL STEEL GRADE 20 AND REFERENCE NOTE '1' ON ALTERNATE MATERIAL MATERIAL STEEL GRADE 15 & 25 TO GOST 1050-74.

a) CHEMICAL COMPOSITION AS PER GOST 1050.74.

GRADE OF STEEL	CONTENT OF ELEMENTS %						REMARKS
	C	Si	Mn	Cr	S	P	
				MAXIMUM			
20	0.17-0.24	0.17-0.37	0.35-0.65	0.25	0.040	0.035	Ref,Matl
15	0.12-0.19	0.17-0.37	0.35-0.65	0.25	0.040	0.035	Alt,Matl
25	0.22-0.30	0.17-0.37	0.50-0.80	0.25	0.040	0.035	Alt,Matl

RESIDUAL CONTENT OF COPPER AND NICKEL SHOULD NOT EXCEED 0.25% EACH

b) MECHANICAL PROPERTIES UNDER NORMALISED CONDITION AS PER GOST 1050-74.

GRADE OF STEEL	TENSILE STRENGTH Kgf/mm²	YIELD POINT Kgf/mm²	RELATIVE ELONGATION %	HARDNESS B H N max	REMARKS
	MINIMUM				
20	42	25	25	163	Ref,Matl
15	38	23	27	149	Alt,Matl
25	46	28	23	170	Alt,Matl

PILOT SAMPLE SHOULD BE APPROVED BY A H S P BEFORE BULK PRODUCTION.

EST WT	TO BE STAMPED OR MARKED WHERE INDICATED THUS # (LETTERS)
0.066 kg.	

ALL SHARP EDGES AND CORNERS TO BE REMOVED UNLESS OTHERWISE STATED MACHINED CORNERS TO HAVE R OUTSIDE R INSIDE EQUIVALENT CHAMFERS ARE PERMISSIBLE

ISSUE	DATE	NATURE OF AMENDMENTS
A	27-5-09	3rd ALTERATION COMM. MINUTES POINT 4 DATE 27-2-09

DRN	
CHD	
TCD	
APPD	
DATE	10-3-86
SCALE: 1 : 1	
DIMENSIONS IN mm	
TOLERANCE ON DIMNS UNLESS OTHERWISE STATED IS : 2102-69	
ALL THREADS TO CONFORM TO IS 4218 PART IV	

MATERIAL: ROUND BAR 20-5GOST 7417-75 / 20 GOST 1051-73

USED ON: Cb 419-05-7, Cb 419-06-7

CONTROLLERATE OF INSPECTION (HEAVY VEHICLES) AVADI

TITLE: BOSS

D S CAT NUMBER

DRAWING NUMBER 3319-37-1

A7

SIZE A3

DRAWING NUMBER
3319-112

Rz80 (V)

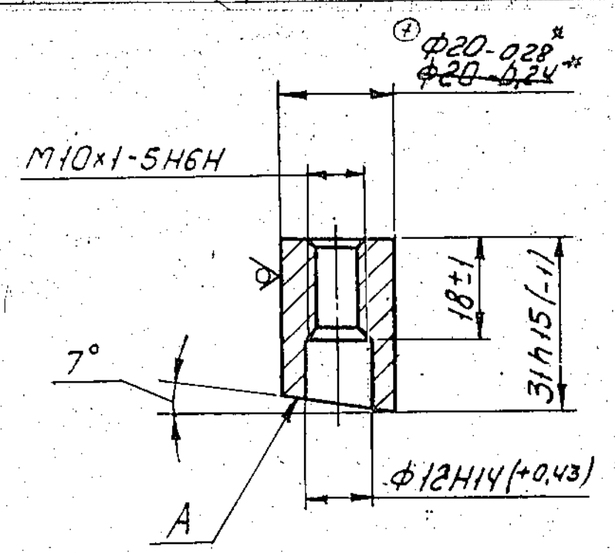

1. ALTERNATE MATERIAL:STEEL 15 AND 25 GOST 1050-74.
2. TECHNICAL REQUIREMENTS FOR THREAD AS PER STANDARD 82052-00.
3. BEFORE WELDING COMPONENT SURFACE A MAY BE ADJUSTED.
4. *DIMENSION FOR REFERENCE.

(A) EQUIVALENT MATERIAL
STEEL 070M20 (EN 3A) TO BS:970

EXPLANATORY NOTE :

5. REFERENCE MATERIAL QUOTED:

COLD DRAWN STEEL ROUND BAR Φ 20mm. TO GOST 7417-75. ACCURACY CLASS 5, SURFACE QUALITY 'B' TO GOST 1051-73 MANUFACTURED IN ACCORDANCE WITH QUALITY CARBON STRUCTURAL STEEL GRADE 20 AND REFERENCE NOTE '1' ON ALTERNATE MATERIAL MATERIAL STEEL GRADE 15 & 25 TO GOST 1050-74.

a) CHEMICAL COMPOSITION AS PER GOST 1050.74.

GRADE OF STEEL	CONTENT OF ELEMENTS %						REMARKS
	C	Si	Mn	Cr	S	P	
	MAXIMUM						
20	0.17-0.24	0.17-0.37	0.35-0.65	0.25	0.040	0.035	Ref,Matl
15	0.12-0.19	0.17-0.37	0.35-0.65	0.25	0.040	0.035	Alt,Matl
25	0.22-0.30	0.17-0.37	0.50-0.80	0.25	0.040	0.035	Alt,Matl

RESIDUAL CONTENT OF COPPER AND NICKEL SHOULD NOT EXCEED 0.25% EACH

b) MECHANICAL PROPERTIES UNDER NORMALISED CONDITION AS PER GOST 1050-74.

GRADE OF STEEL	TENSILE STRENGTH Kgf/mm²	YIELD POINT Kgf/mm²	RELATIVE ELONGATION %	HARDNESS B H N max	REMARKS
	MINIMUM				
20	42	25	25	163	Ref,Matl
15	38	23	27	149	Alt,Matl
25	46	28	23	170	Alt,Matl

PILOT SAMPLE SHOULD BE APPROVED BY A H S P BEFORE BULK PRODUCTION.

EST WT	TO BE STAMPED OR MARKED WHERE INDICATED THUS #
0.05 Kg	(LETTERS)

ALL SHARP EDGES AND CORNERS TO BE REMOVED UNLESS OTHERWISE STATED MACHINED CORNERS TO HAVE R OUTSIDE R INSIDE EQUIVALENT CHAMFERS ARE PERMISSIBLE

ISSUE	DATE	NATURE OF AMENDMENTS
A	9-7-10	4th ALT.COMM.Mtg.MINUTES POINT No.5. DT. 26-10-09

DRN		
CHD		
TCD		
APPD		
DATE	06-3-86	

SCALE: 1 : 1
DIMENSIONS IN mm
TOLERANCE ON DIMNS UNLESS OTHERWISE STATED IS : 2102-69
ALL THREADS TO CONFORM TO IS 4218 PART IV

MATERIAL: ROUND BAR 20-5GOST 7417-75 / 20 GOST 1051-73

USED ON: CD 419-05-7, CD 419-06-7

CONTROLLERATE OF INSPECTION (HEAVY VEHICLES) AVADI

TITLE: BOSS

D S CAT NUMBER

DRAWING NUMBER 3319-112

A7

SIZE A3

DRAWING NUMBER
3319-112-1

20 (√)

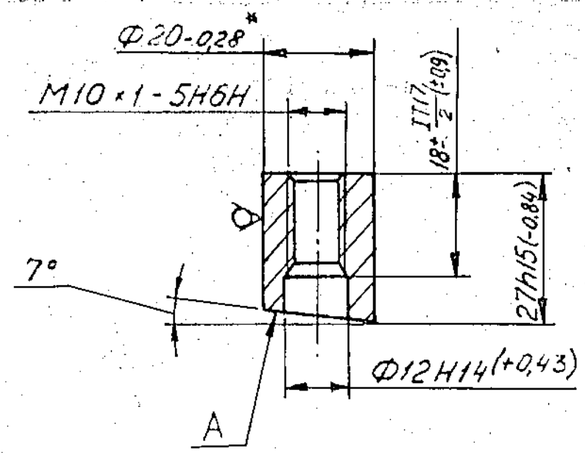

1. ALTERNATE MATERIAL:STEEL 15 AND 25 GOST 1050-74.
2. TECHNICAL REQUIREMENTS FOR THREAD AS PER STANDARD 82052-00.
3. BEFORE WELDING COMPONENT SURFACE A MAY BE ADJUSTED.
4. *DIMENSION FOR REFERENCE.

(A) EQUIVALENT MATERIAL
STEEL 070 M20 (EN 3A) TO BS:970

EXPLANATORY NOTE :

1. REFERENCE MATERIAL QUOTED:-

COLD DRAWN STEEL ROUND BAR Φ 20mm TO GOST 7417-75, ACCURACY CLASS 5, SURFACE QUALITY 'B' TO GOST 1051-73 MANUFACTURED IN ACCORDANCE WITH QUALITY CARBON STRUCTURAL STEEL GRADE 20 AND REFERENCE NOTE'1' ON ALTERNATE MATERIAL STEEL GRADE 15 & 25 TO GOST 1050-74.

a) CHEMICAL COMPOSITION AS PER GOST 1050-74.

GRADE OF STEEL	CONTENT OF ELEMENTS %						REMARKS
	C	Si	Mn	Cr	S	P	
				MAXIMUM			
20	0,17-0.24	0.17-0.37	0.35-0.65	0.25	0.040	0.035	Ref.Matl.
15	0·12-0.19	0.17-0.37	0.35-0.65	0.25	0.040	0.035	Alt.Matl.
25	0.22-0.30	0.17-0.37	0.50-0.80	0.25	0.040	0.035	Alt.Matl.

RESIDUAL CONTENT OF COPPER AND NICKEL SHOULD NOT EXCEED 0.25% EACH

b) MECHANICAL PROPERTIES UNDER NORMALISED CONDITION AS PER GOST 1050-74

GRADE OF STEEL	TENSILE STRENGTH Kgf/mm²	YIELD POINT Kgf/mm²	RELATIVE ELONGATION %	HARDNESS B.H.N. MAX	REMARKS
	MINIMUM				
20	42	25	25	163	Ref.Matl
15	38	23	27	149	Alt,Matl
25	46	28	23	170	Alt,Matl

PILOT SAMPLE SHOULD BE APPROVED BY A H S P BEFORE BULK PRODUCTION.

EST. WT 0.044 kg

TO BE STAMPED OR MARKED WHERE INDICATED THUS # (LETTERS)

ALL SHARP EDGES AND CORNERS TO BE REMOVED UNLESS OTHERWISE STATED MACHINED CORNERS TO HAVE R OUTSIDE R INSIDE EQUIVALENT CHAMFERS ARE PERMISSIBLE

ISSUE	DATE	NATURE OF AMENDMENTS
A	9-7-10	4th ALT.COMM.Mtg. MINUTES POINT No. 5 DT. 26-10-09

DRN
CHD
TCD
APPD
DATE 11-3-86
SCALE : 1 : 1
DIMENSIONS IN mm
TOLERANCE ON DIMNS UNLESS OTHERWISE STATED IS : 2102-69
ALL THREADS TO CONFORM TO IS 4218 PART IV

MATERIAL ROUND BAR 20-5GOST7417-75 / 20 GOST 1051-73

USED ON СБ 419-05-7 СБ 419-06-7

CONTROLLERATE OF INSPECTION (HEAVY VEHICLES) AVADI

TITLE: BOSS

D S CAT NUMBER

DRAWING NUMBER 3319-112-1

A7

SIZE A3

DRAWING NUMBER
3319-114

20/(√)

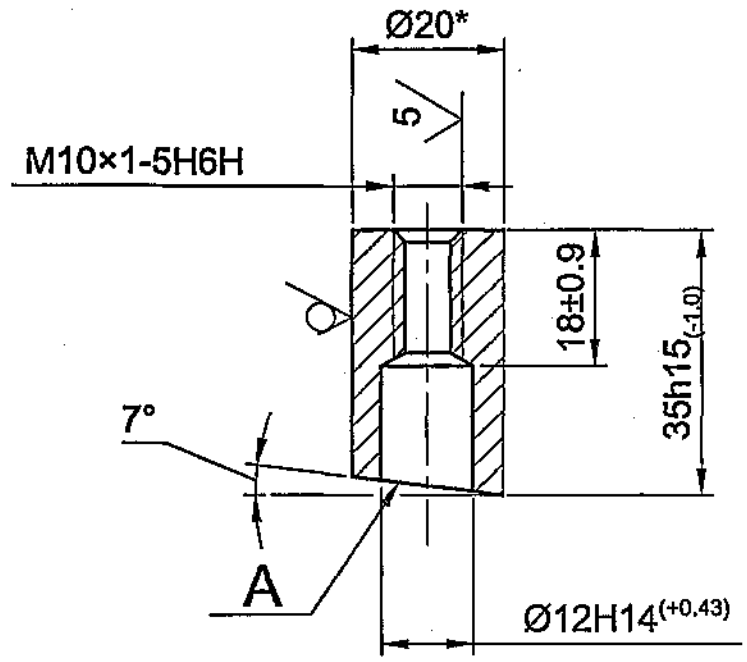

1. *Alternate material is steel 15 and 25 Gost 1050-88.*

2. *Adjustment of part is allowed on surface "A" before welding in assembly.*

3. ** Dimension is given for reference.*

DRAWING INDIANISED BASED ON RUSSIAN ORIGINAL ISSUE - 1

F-4 90/253

PILOT SAMPLE SHOULD BE APPROVED BY A H S P BEFORE BULK PRODUCTION.

EST. WT. (Kg) 0.056	TO BE STAMPED OR MARKED WHERE INDICATED THUS # (LETTERS)		
ALL SHARP EDGES AND CORNERS TO BE REMOVED UNLESS OTHERWISE STATED MACHINED CORNERS TO HAVE R OUT-SIDE R INSIDE EQUIVALENT CHAMFERS ARE PERMISSIBLE.			
MATERIAL :- ROUND BAR 20-h12 GOST7417-75 / 20-Б GOST1051-73	USED ON :- СБ 419-06-19		
ISSUE	DATE	NATURE OF AMENDMENTS	
DRN	SCALE :- 1 : 1	CONTROLLERATE OF QUALITY ASSURANCE (HEAVY VEHICLES) AVADI	
CHD	DIMENSIONS IN mm		
APPD	TOLERANCE ON DIMENSIONS UNLESS OTHERWISE STATED IS : 2102 - 69	TITLE :- BOSS	
DATE	ALL THREADS TO CONFORM TO	D S CAT NUMBER	DRAWING NUMBER 3319-114

SIZE A4

Формат / Format	Зона / Zone	Поз. / Items	Code / Обозначение	Nomenclature / Наименование	Qty. / Кол.	Примечание / Remarks
				Documents		
				Документация		
				Assembly drawing		
A2			сб.419-00-20СБ	Сборочный чертеж		
				Assembly units		
				Сборочные единицы		
				RHS inlet manifold		
A4		1	сб.419-05-19	Коллектор впускной правый	1	
A4		2	сб.419-06-19	Коллектор впускной левый LHS inlet manifold	1	
				Parts		
				Детали		
A3		3	306-89 Gasket	Прокладка	12	
A3		4	351-02 Nut	Гайка М8	48	
				Standard articles		
				Стандартные изделия		
A3		6	353-24 Washer	Шайба 8Т65Г ГОСТ 6402-70	48	ТИ

Изм.	Лист	№ докум.	Подп.	Дата
4		2000-49		

INLET PIPE LINE

сб.419-00-20

Trans. & Ckd. by : M/s SWYAZ

Authenticated by :

Approved by :

Engine Factory, Avadi

Трубопровод впускной

Letter / Лит.	Sheet / Лист	Sheets / Листов
0		1

F 4/77

Подп. и дата

Инв. № дубл.

Взам. инв. №

Подп. и дата

Инв. № подл. 44353

Формат A4

сб419-00-20СБ

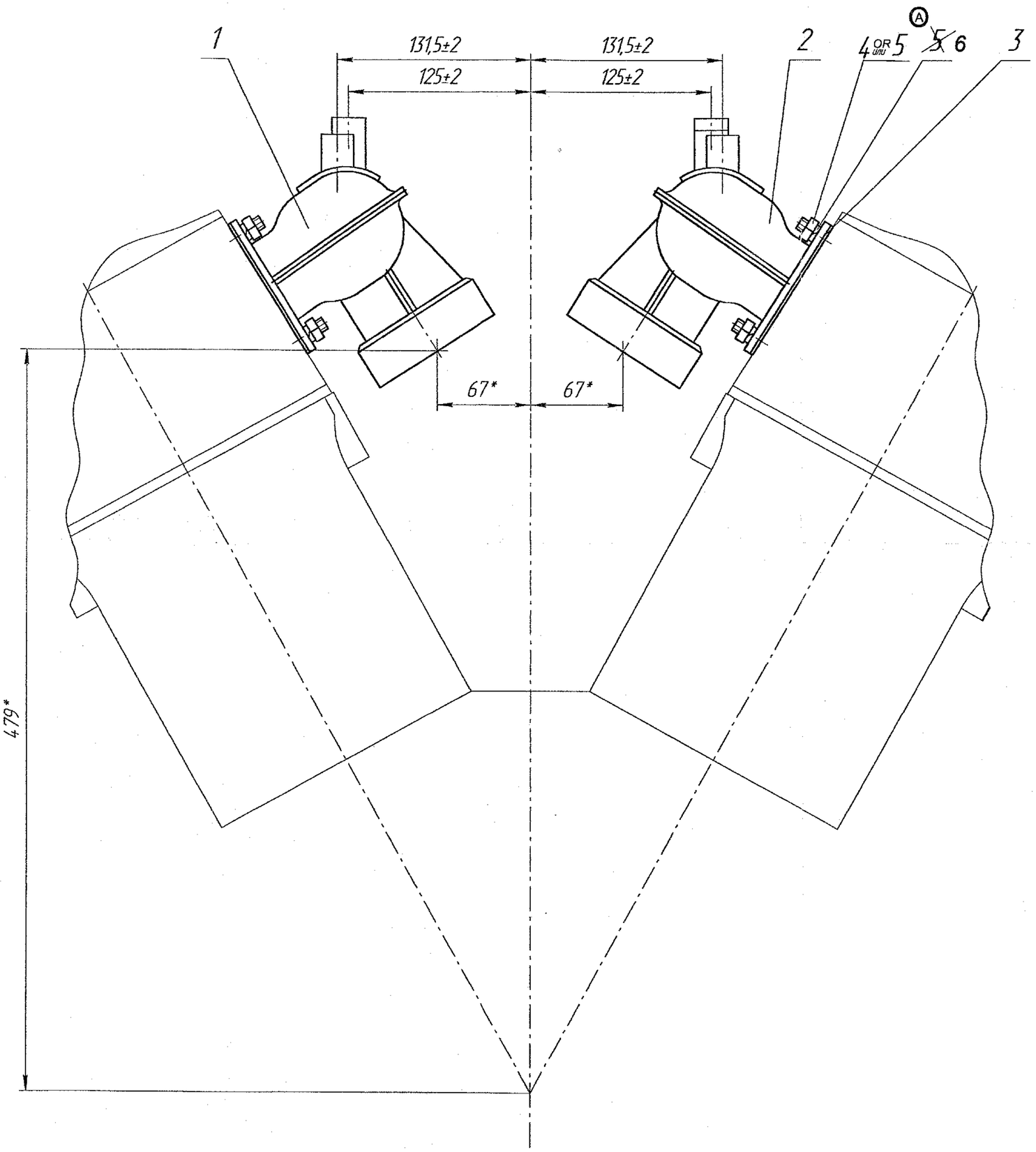

1. Допускается на гранях гаек крепления впускных коллекторов наличие следов от инструмента после заворачивания.

2. Для сборочных единиц в тропическом исполнении детали, имеющие в спецификации данного чертежа в графе "Примечание" условное обозначение "ТИ", должны иметь тропическое исполнение, предусмотренное чертежами.

3. *Размеры для справок.

4. Деталь поз.3 устанавливать на компаунд КЛТ-75Т по ИЛ-759-88.

1. Presence of traces from tools on faces on inlet manifold for fastening of nuts after turning is permitted.
2. Part and assembly units, having conventional code "ТИ" in the part list of given drawing in column "Remark" should have tropicalized constructions, specified in the drawing for for part.
3. * Dimensions for references.
4. Set the part item 3 on compound КЛТ-759 as per ИЛ-759-88.

Изм	Лист	№ докум	Подп.	Дата
8	A	508-06	Dt.23-09-08	
	–	2000-49		

Trans. & Ckd. by : M/s SWYAZ
Authenticated by :
Approved by :
Engine Factory, Avadi

INLET PIPELINE

сб.419-00-20СБ

Трубопровод впускной

Сборочный чертеж

Assembly drawing

Letter	Weight	Scale
Лит.	Масса	Масштаб
0		1:2
Лист	Листов	1
Sheet	Sheets	1/18

Инв. № подл.	Подп. и дата	Взам. инв. №	Инв. № дубл.	Подп. и дата
44802				

Формат / Format	Зона / Zone	Поз. / Items	Code / Обозначение	Nomenclature / Наименование	Qty. / Кол.	Примечание / Remarks
				Documents / Документация		
				Assembly drawing		
A1			сб.419-05-19СБ	Сборочный чертеж		
				Assembly units / Сборочные единицы		
A4		1	сб.419-11-2 Branch pipe	Патрубок	1	
				Parts / Детали		
*)		2	319-08-2 Flange	Фланец	6	*)A4×3
A4		3	3319-37 Boss	Бонка		1шт.доп.зам.
				It is permitted to replace 1 piece by item 4		на поз.4.
A4		4	3319-37-1 Boss	Бонка		1шт.доп.зам.
				It is permitted to replace 1 piece by item 3		на поз.3.
A3		5	319-62 Cover plate	Накладка	3	
A1		6	319-67-16 Half inlet manifold	Половина коллектора	1	
				впускного		
A1		7	319-67-17 Half inlet manifold	Половина коллектора	1	
				впускного		
A4		11	3319-114 Boss	Бонка	2	

Подп. и дата | Инв. № дубл. | Взам. инв. № | Подп. и дата

Изм.	Лист	№ докум.	Подп.	Дата
	Зам.	2000-49		

RHS INLET MANIFOLD сб.419-05-19

Trans. & Ckd. by : M/s SWYAZ
Authenticated by :
Approved by :
Engine Factory, Avadi

Коллектор впускной правый

Letter / Лит.	Sheet / Лист	Sheets / Листов
0,4		1

Инв. № подл. 44808

F 4/79

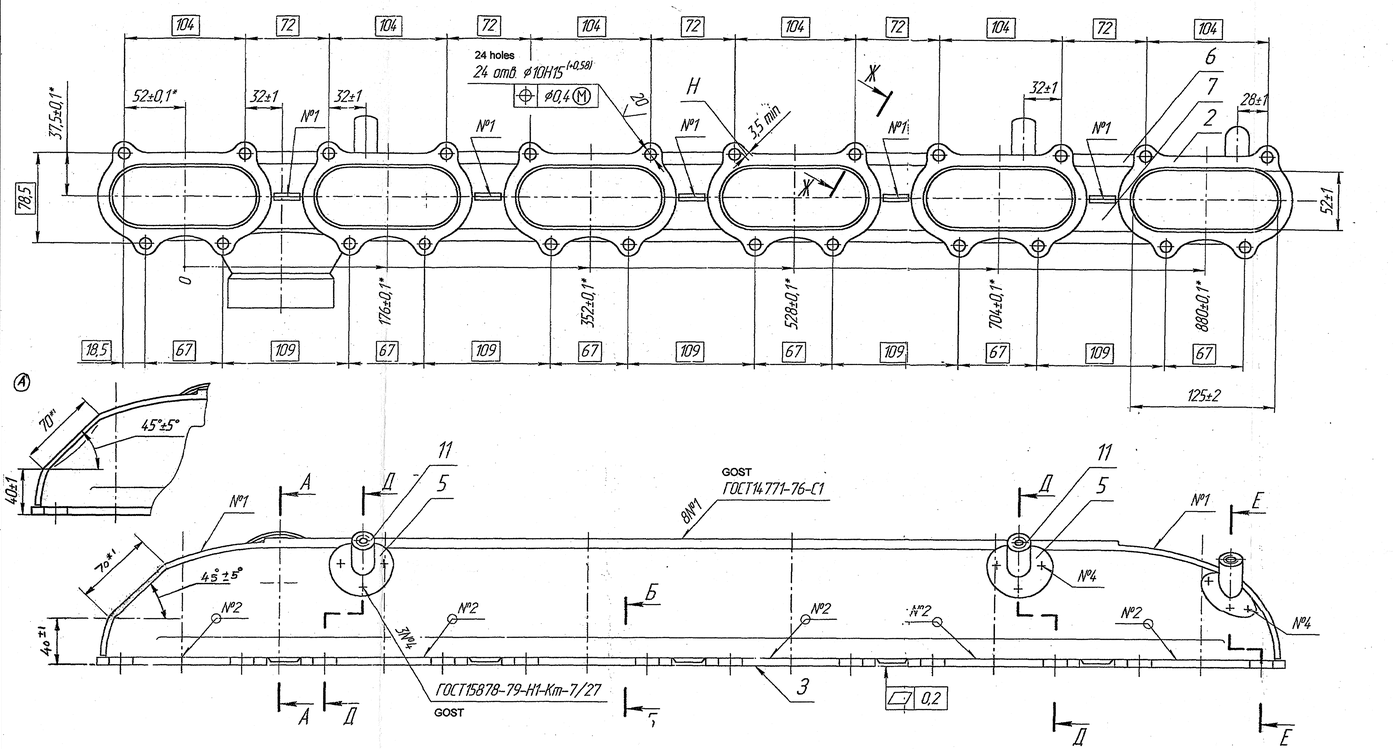

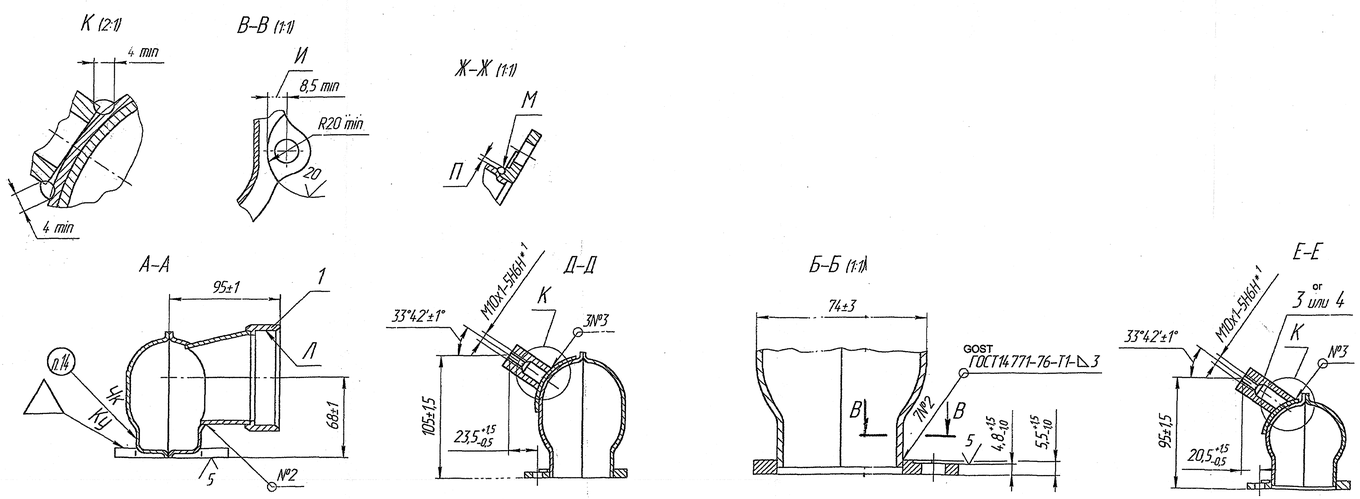

1. ELectric arc welding in protective gas medium for seam No. 3.
2. It is permitted to carry out welding of separate sections by electric arc or gas welding.
3. Increasing of dimension И is permitted up to the value, at which thickness of leg of welds remains minimum 2.5 mm.
4. Decreasing of dimension of seam П up to 0.5 mm in place M after machining is permitted.
5. Check the correctness of location of holes for fastening of flanges on special fixtures.
6. Tolerance of coaxility of cover plates item 5 in relation to the axis of bosses item 11 up to 3 mm.
7. Facing of lug and welding of holes with subsequent drilling and dressing is permitted, if dimension H should be not less than 2 mm before facing. Quality of facing maximum 8 pieces for one manifold and maximum 2 pieces for flange.
8. Thickness of welds minimum 2 mm in place of facing of flanges is permitted.
9. After welding of bosses items 3 or 4, calibrate the thread 11.
10. * Dimensions are ensureed by tool.
11. Test for air-tightness in water-tank by air pressure (100±50) kPa [(1.0±0.5) kgf/cm2]; passing of air is not permitted. In place where air is passing, it is permitted to weld with subsequent dressing and repeated tests for air-tightness. Cracks on base metal is not permitted and there correctness is not subjected.
12. Paint and varnish coating ПФ-115 GOST 6465-76, blue colour, as per ИЛ-580-84 inside and outside, except surface 3 or Л. During dispatch to spare part, coat the surface 3 by thin equal layer enamel ПФ-115 GOST 6465-76. Uneveness and leakage of enamel is not permitted.
13. According to the requirement of Q.C. not less than one time in quarter or from 150 pieces of one manifold are dispatched in laboratory for checking the welding quality, absence of defects of welded joints and thickness of dispatched metals as per clamping or as per joints, which should be not less than 2 mm for manual electric arc welding and 1.8 mm for semiautomatic welding in carbon dioxide medium by wire св08-Г2С.
14. Mark by black enamel ПФ-115 GOST 6465-75 with letter size 10-Пр3 GOST 26.008-85.
15. *1 Dimensions for references.

1. Для шва №3 сварка электродуговая в среде защитных газов.
2. Допускается сварку отдельных участков производить электродуговой или газовой сваркой.
3. Увеличение размера И допускается до величин, при которых толщина катета сварного шва остается не менее 2,5мм.
4. В местах М допускается уменьшение размера шва П до 0,5мм после механической обработки.
5. Правильность расположения отверстий для крепления фланцев проверить на специальном приспособлении.
6. Допуск соосности накладок поз.5 относительно осей бонок поз. 11 до 3мм.
7. Допускается наплавка проушин и заварка отверстий с последующим сверлением и зачисткой, если размер Н до наплавки был не менее 2мм. Количество наплавок не более 8 штук на один коллектор и не более 2 штук на фланец.
8. Толщина сварного шва в местах облицовки фланцев допускается 2мм, не менее.
9. После приварки бонок поз.3 или 4, 11 резьбу калибровать.
10. *Размеры обеспечить инструментом.
11. Испытать на герметичность в водяной ванне воздухом давлением (100±50)кПа [(1,0±0,5)кгс/см²]; пропуск воздуха не допускается. В местах пропуска воздуха допускается подварка с последующей зачисткой и повторным испытанием на герметичность. Трещины по основному металлу не допускаются и исправлению не подлежат.
12. Покрытие лакокрасочное ПФ-115 ГОСТ 6465-76, цвет голубой, по ИЛ-580-84 внутри и снаружи, кроме поверхностей 3 и Л. При отправке в запчасти покрытие поверхности 3 тонким ровным слоем эмали ПФ-115 ГОСТ 6465-76. Неровности и подтеки эмали не допускается.
13. По требованию ОТК не реже одного раза в квартал или от 150 штук один коллектор направляется в лабораторию для проверки качества сварки, отсутствия внутренних дефектов сварного соединения и толщины наплавленного металла по отбуртовке или по стыку, которая должна быть не менее 2мм для ручной электродуговой сварки и 1,8мм для полуавтоматической сварки в среде углекислого газа проволокой св08-Г2С.
14. Маркировать черной эмалью ПФ-115 ГОСТ 6465-76 шрифтом 10-Пр3 ГОСТ 26.008-85.
15. *Размеры для справок.

29.11.06

RHS INLET MANIFOLD

А	409-03	ОТ 23-09-08		СБ 419-05-19СБ	Letter	Weight	Scale
Изм	Лист	№ докум.	Подп.	Дата			
Разр.	Зам	2000-49					
Trans. & Cod. by: MA SWYAZ				Коллектор впускной правый	Лит	Масса	Масштаб
				Сборочный чертеж	0	6,4	1:2
Authenticated by:					Лист	Листов	1
Approved by:				Assembly drawing	Sheet	Sheets	1
Engine Factory, Avadi							80

Формат А1

Инв. № подл.	Подп. и дата	Взам. инв. №	Инв. № дубл.	Подп. и дата
414.2.09				

Формат / Format	Зона / Zone	Поз. / Items	Code / Обозначение	Nomenclature / Наименование	Qty. / Кол.	Примечание / Remarks
				Documents		
				Документация		
				Assembly drawing		
A1			сб.419-06-19СБ	Сборочный чертеж		
				Assembly units		
				Сборочные единицы		
A4		1	сб.419-11-2 Branch pipe	Патрубок	1	
				Parts		
				Детали		
*1		2	319-08-2 Flange	Фланец	6	*)A4×3
A4		3	3319-37 Boss	Бонка		1шт.доп.зам.
				It is permitted to replace 1 piece by item 4		на поз.4.
A4		4	3319-37-1 Boss	Бонка		1шт.доп.зам.
				It is permitted to replace 1 piece by item 3		на поз.3.
A3		5	319-62 Cover plate	Накладка	4	
A1		6	319-67-16 Half inlet manifold	Половина коллектора	1	
				впускного		
A1		7	319-67-17-01 Half inlet manifold	Половина коллектора	1	
				впускного		
A4		9	3319-112 Boss	Бонка		2шт.доп.зам.
				It is permitted to replace 2 pieces by item 10		на поз.10
A4		10	3319-112-1 Boss	Бонка		2шт.доп.зам.
				It is permitted to replace 2 pieces by item 9		на поз.9
A4		11	3319-114 Boss	Бонка	2	

Подп. и дата

Инв. № дубл.

Взам. инв. №

Подп. и дата

Изм.	Лист	№ докум.	Подп.	Дата
	Зам.	2000-49		

LHS INLET MANIFOLD сб.419-06-19

Trans. & Ckd. by : M/s SWYAZ

Authenticated by :

Approved by :

Engine Factory, Avadi

Коллектор впускной левый

Letter / Лит.	Sheet / Лист	Sheets / Листов
0		1

Инв. № подл. 44806

Формат A4

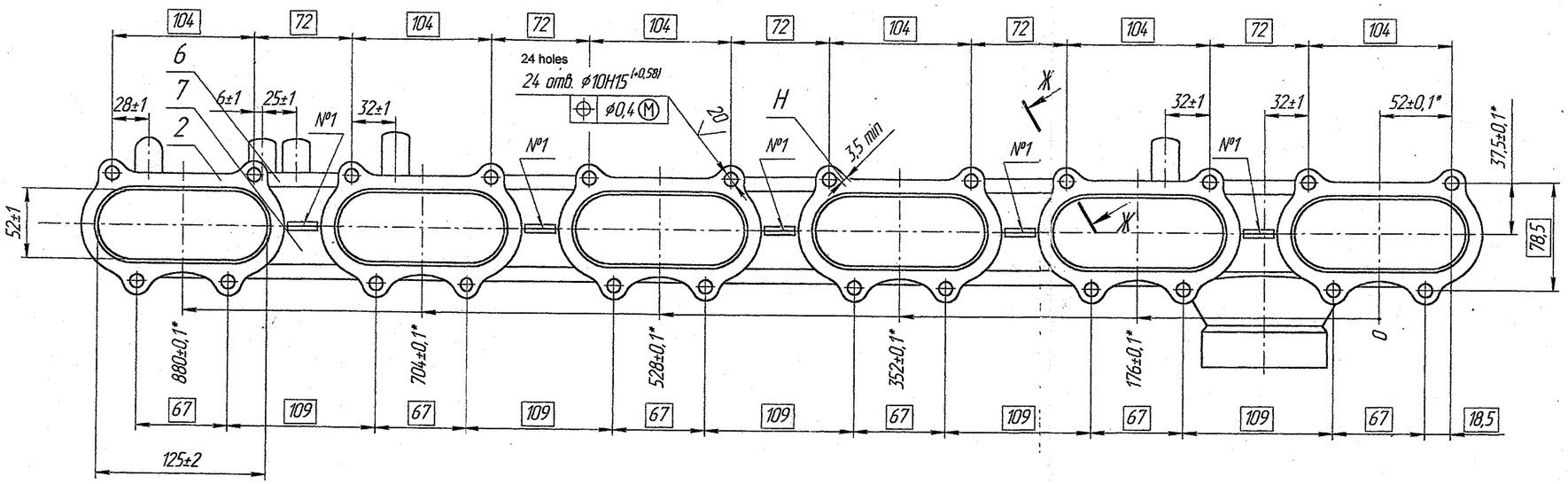

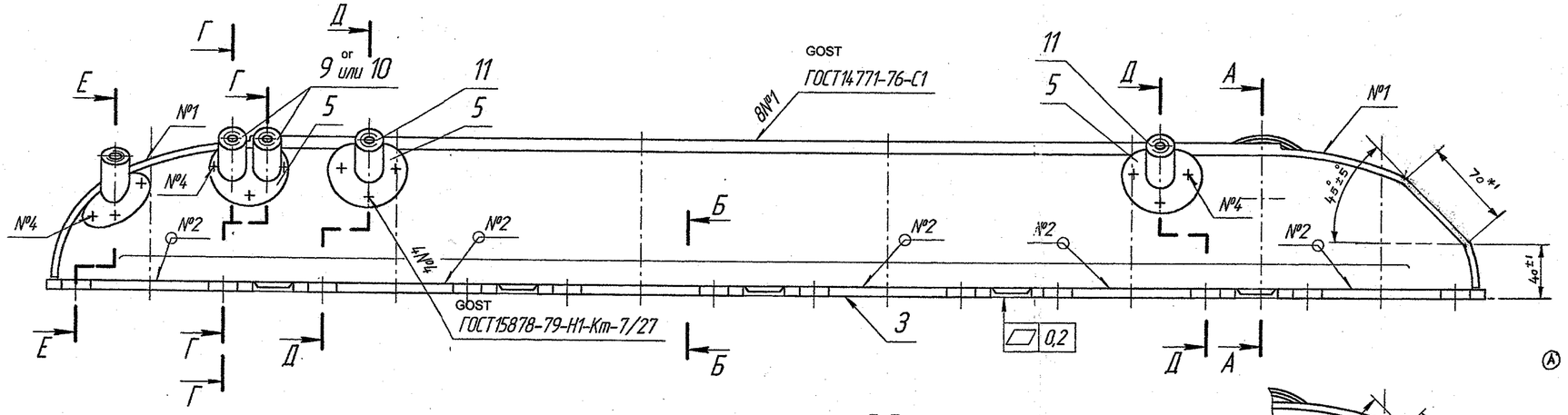

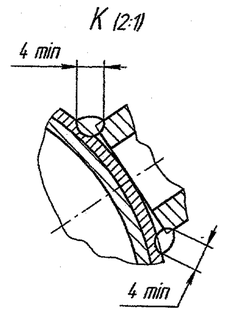

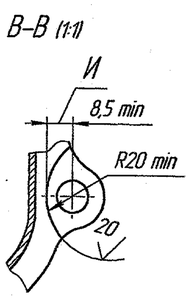

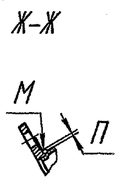

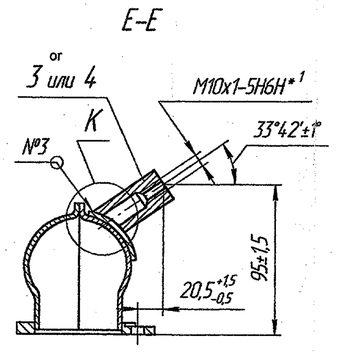

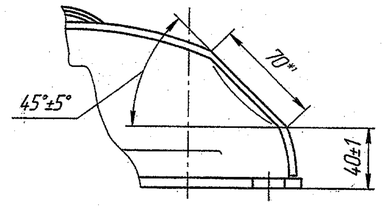

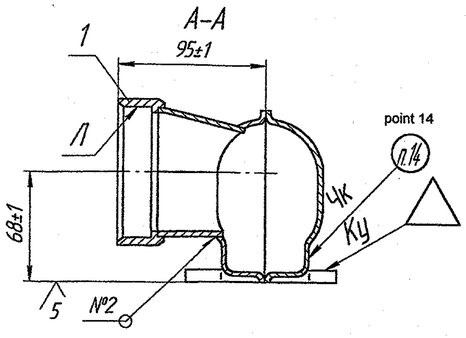

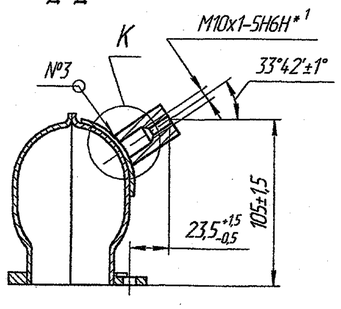

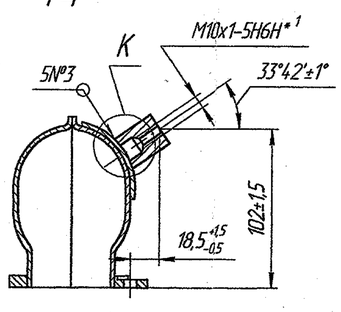

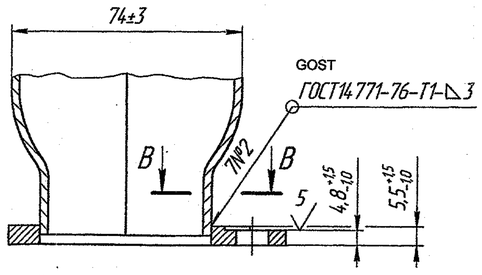

1. Для шва №3 сварка электродуговая в среде защитных газов.
2. Допускается сварку отдельных участков производить электродуговой или газовой сваркой.
3. Увеличение размера И допускается до величин, при которых толщина катета сварного шва остается не менее 2,5мм.
4. В местах М допускается уменьшение размера шва П до 0,5мм после механической обработки.
5. Правильность расположения отверстий для крепления фланцев проверить на специальном приспособлении.
6. Допуск соосности накладок поз.5 относительно осей бонок поз.9 или 10, 11 до 3мм.
7. Допускается наплавка проушин и заварка отверстий с последующим сверлением и зачисткой, если размер Н до наплавки был не менее 2мм. Количество наплавок не более 8 штук на один коллектор и не более 2х штук на фланец.
8. Толщина сварного шва в местах облицовки фланцев допускается 2мм, не менее.
9. После приварки бонок поз.3 или 4,9 или 10, 11 резьбу калибровать.
10. *Размеры обеспечить инструментом.
11. Испытать на герметичность в водяной ванне воздухом давлением (100±50)кПа [(1,0±0,5)кгс/см²]; пропуск воздуха не допускается. В местах пропуска воздуха допускается подварка с последующей зачисткой и повторным испытанием на герметичность. Трещины по основному металлу не допускаются и исправлению не подлежат.
12. Покрытие лакокрасочное ПФ-115 ГОСТ 6465-76, цвет голубой, по ИЛ-580-84 внутри и снаружи, кроме поверхностей 3 и Л. При отправке в запчасти покрытие поверхности 3 тонким равным слоем эмали ПФ-115 ГОСТ 6465-76. Неровности и подтеки эмали не допускается.
13. По требованию ОТК не реже одного раза в квартал или от 150 штук один коллектор направляется в лабораторию для проверки качества сварки, отсутствия внутренних дефектов сварного соединения и толщины наплавленного металла по отбуртовке или по стыку, которая должна быть не менее 2мм для ручной электродуговой сварки и 1,8мм для полуавтоматической сварки в среде углекислого газа проволокой св08-Г2С.
14. Маркировать черной эмалью ПФ-115 ГОСТ 6465-76 шрифтом 10-Пр3 ГОСТ 26.008-85.
15. *Размеры для справок.

1. ELectric arc welding in protective gas medium for seam No. 3.
2. It is permitted to carry out welding of separate sections by electric arc or gas welding.
3. Increasing of dimension И is permitted up to the value, at which thickness of leg of welds remains minimum 2.5 mm.
4. Decreasing of dimension of seam П up to 0.5 mm in place M after machining is permitted.
5. Check the correctness of location of holes for fastening of flanges on special fixtures.
6. Tolerance of coaxility of cover plates item 5 in relation to the axis of bosses item 11 up to 3 mm.
7. Facing of lug and welding of holes with subsquent drilling and dressing is permitted, if dimension H should be not less than 2 mm before facing. Quality of facing maximum 8 pieces for one manifold and maximum 2 pieces for flange.
8. Thickness of welds minimum 2 mm in place of facing of flanges is permitted.
9. After welding of bosses items 3 or 4, calibrate the thread 11.
10. * Dimensions are ensureed by tool.
11. Test for air-tightness in water-tank by air pressure (100±50) kPa [(1.0±0.5) kgf/cm2]; passing of air is not permitted. In place where air is passing, it is permitted to weld with subsquent dressing and repeated tests for air-tightness. Cracks on base metal is not permitted and there correctness is not subjected.
12. Paint and varnish coating ПФ-115 GOST 6465-76, blue colour, as per ИЛ-580-84 inside and outside, except surface 3 or Л. During dispatch to spare part, coat the surface 3 by thin equal layer enamel ПФ-115 GOST 6465-76. Uneveness and leakage of enamel is not permitted.
13. According to the requirement of Q.C. not less than one time in quarter or from 150 pieces of one manifold are dispatched in laboratory for checking the welding quality, absence of defects of welded joints and thickness of dispatched metals as per clamping or as per joints, which should be not less than 2 mm for manual electric arc welding and 1.8 mm for semiautomatic welding in carbon dioxide medium by wire св08-Г2С.
14. Mark by black enamel ПФ-115 GOST 6465-75 with letter size 10-Пр3 GOST 26.008-85.
15. *1 Dimensions for references.

Изм	Лист	№ докум.	Подп.	Дата
А		409-03		Dt.23-09-08
	Зам.	2000-49		

Trans. & Ckd. by : M/s SWYAZ
Authenticated by :
Approved by :
Engine Factory, Avadi

LHS INLET MANIFOLD

сб.419-06-19СБ

Коллектор впускной левый
Сборочный чертеж

Assembly drawing

Letter	Weight	Scale
Лит.	Масса	Масштаб
0	6,4	1:2

Лист | Листов 1
Sheet | Sheets 1

Формат А1

Инв. № подл. | Подп. и дата | Взам. инв. № | Инв. № дубл. | Подп. и дата

Формат Format	Зона Zone	Поз. Items	Code Обозначение	Nomenclature Наименование	Qty. Кол.	Примечание Remarks
				Documents Документация		
				Assembly drawing		
A3			сб.419-11-2СБ	Сборочный чертеж		
				Parts Детали		
*)		1	419-44-2 Half branch pipe	Половина патрубка	1	*)A4×3
*)		2	419-45-2 Half branch pipe	Половина патрубка	1	*)A4×3
A4		3	419-46 Ring	Кольцо	1	

Изм.	Лист	№ докум.	Подп.	Дата
	Зам.	2000-49		

сб.419-11-2

Trans. & Ckd. by : M/s SWYAZ
Authenticated by :
Approved by :
Engine Factory, Avadi

BRANCH PIPE

Патрубок

Letter Лит.	Sheet Лист	Sheets Листов
O1		1

Инв. № подл. 442416

Подп. и дата | Инв. № дубл. | Взам. инв. № | Подп. и дата

Формат A4

сб.419-11-2СБ

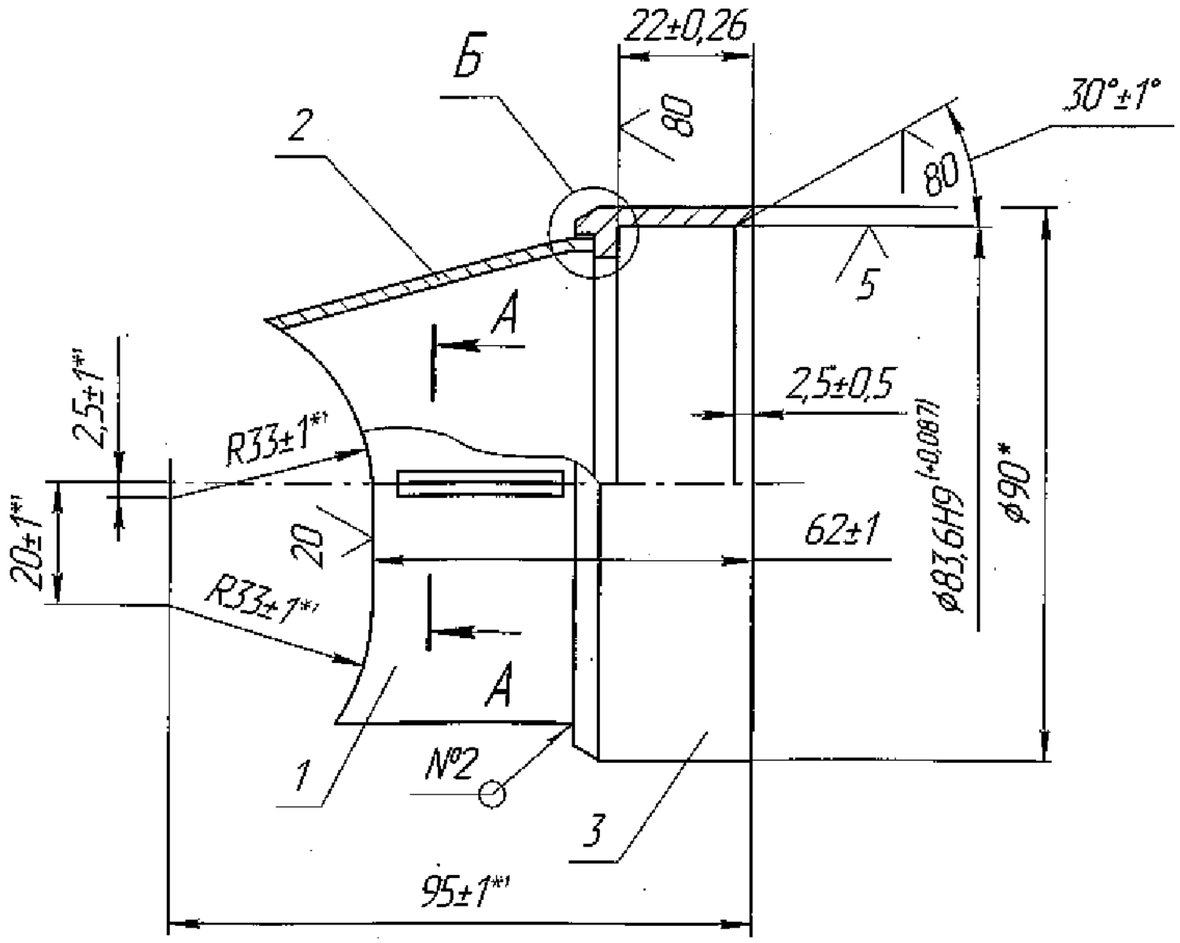

1. Для шва №2 сварка электродуговая в среде защитных газов.
2. *Размер для справок.
3. *1 Размеры обеспечить инструментом.

1. Electric arc welding for seam No. 2 in protective gas medium.
2. * Dimension for references.
3. *1 Dimensions are ensured by tools.

Б(2:1)

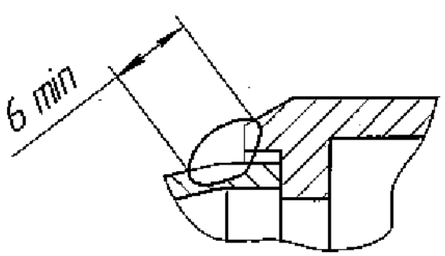

А–А

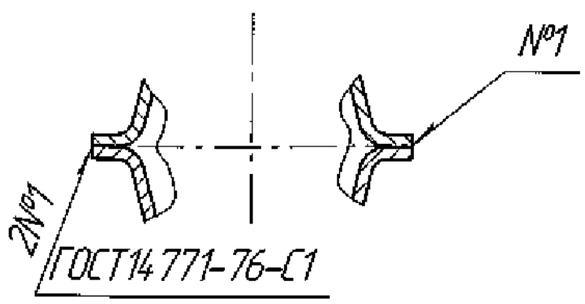

Изм.	Лист	№ докум.	Подп.	Дата
	Зам.	2000-49		

Trans. & Ckd. by : M/s SWYAZ

Authenticated by :

Approved by :

Engine Factory, Avadi

BRANCH PIPE

сб.419-11-2СБ

Patrubok

Сборочный чертеж

Assembly drawing

Letter	Weight	Scale
Лит.	Масса	Масштаб
0_1	0,429	1:1

Лист | Листов 1

Sheet | Sheets 4 / 84

Инв. № подл. 442417 | Подп. и дата | Взам. инв. № | Инв. № дубл. | Подп. и дата