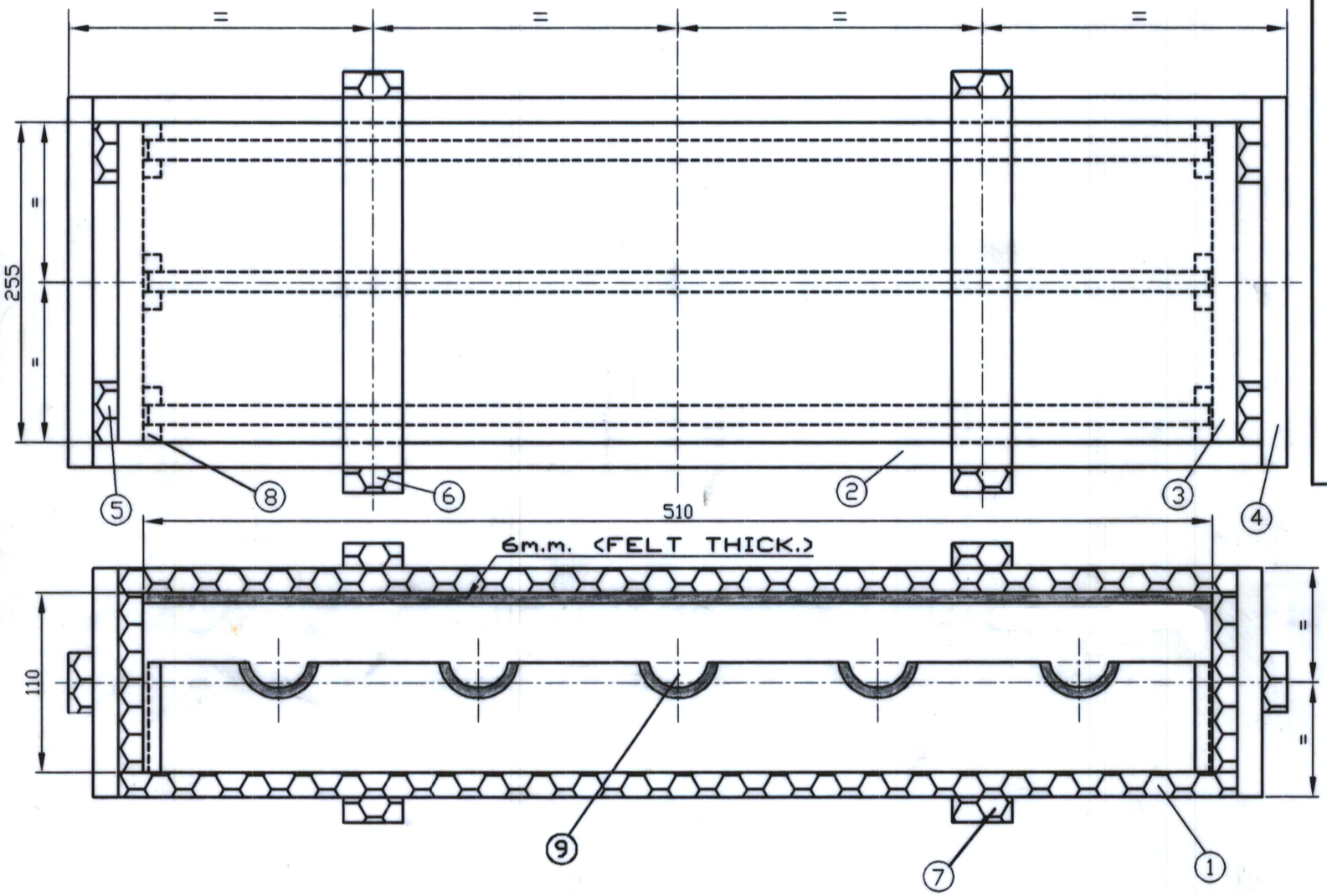

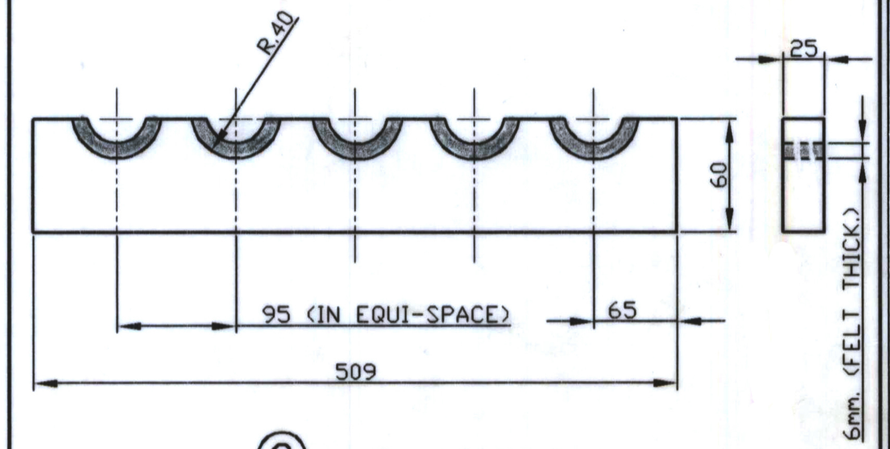

⑨ SUPPORT

NOTE :- EACH SUPPORT TO BE LOOSE FITTED IN BETWEEN TWO STRIPS ON BOTH SIDES.

NOTE :-

WOODEN SPECN. No.- CIGS / SS / 320 (a).

ALL WOODEN MEMBERS EXCEPT THE TOP PLANK SHOULD BE FIXED WITH SUITABLE NAILS AT 75mm. INTERVALS.

THE TOP PLANK SHOULD BE SCREWED UP WITH SUITABLE WOOD-SCREWS.

IN CASE OF TRADE FIRM SUPPLY, SAMPLE 2 Nos. (Min.) ARE TO BE SUBMITTED FOR INSPECTION BEFORE BULK SUPPLY.

6m.m. THICK. FELT TO BE FIXED INSIDE OF THE LID & RADIAL PORTION OF THE SUPPORTS BY ADHESIVE IN GOOD QUALITY PROPERLY.

TO HOLD 5 No. of Compts.

MATERIAL :- GURJAN / MANGO WOOD

ITEM NO.	No. OFF	DESCRIPTION	LENGTH	WIDTH	THICKNESS
9	3	SUPPORTS	SEE IN DETAILS		
8	12	STRIPS	60	20	20
7	4	TOP & BOTTOM BATTENS	295	50	20
6	4	FRONT & REAR BATTENS	190	50	20
5	4	END BATTENS	150	50	20
4	2	HANDLES	295	50	20
3	2	END PLANKS	255	110	20
2	2	FRONT REAR PLANKS	590	110	20
1	2	TOP & BOTTOM PLANKS	550	295	20

DT.&SG.	DESCRIPTION	
AMENDMENTS		

DESCRIPTION IN HINDI LANGUAGE ADDED

SCHEDULE NO :

SCALE : N.T.S. PROJECTION THIRD ANGLE

DRAWN BY : 19/04/03

CHECKED BY : 19/4/03

APPROVED BY : 21/4/03

CONCURRED BY (JWM/SHELL)

SIG. DATE 21/04/03

COMPT. 76.2 m.m. PRE- FRAG. SHELL ASSLY. MK.II

STORE DRG. No.

76.2 प्री-फ्रेग शेल असेम्बली एम.के - II के लिए लकड़ी का पैकिंग सन्दूक

WOODEN PACKING BOX FOR 76.2 PRE-FRAG. SHELL ASSY. MK - II

DRG. No. : CO - 438 A

M / C :

No. of SHTS.- 1

G. & S. FY. COSSIPORE

SHT. No.-- 1

DRAWN AS PER SAMPLE SUPPLIED BY SHELL SEC. VIDE MEMO No.:- SH/TKM/MIS,Dtd.-17/04/03 & 107/63/2003-04/76.2 PRE-FRAG.(P/AMN.)