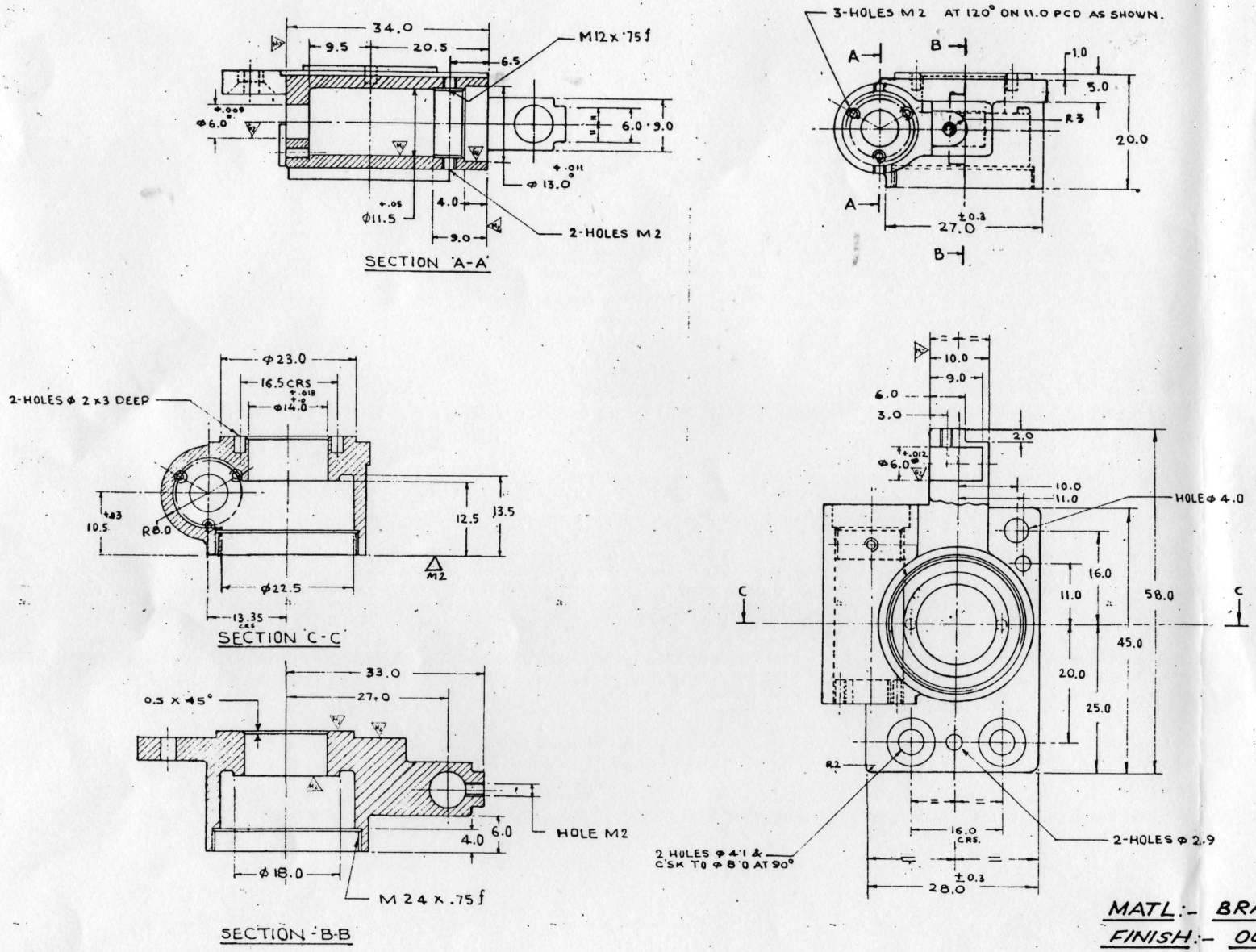

† MCT-2105/1

FOR TRADE ONLY
Date of Issue.....

MATL:- BRASS IS:1264/1997, Gd. DCB-1
FINISH:- OUT SIDE PAINTED BLACK.

DIMENSIONS ARE IN M/M

आयुध निर्माणी ORDNANCE FACTORY देहरादून DEHRADUN	प्रारू॰ DR- अनु॰ TR- पड़ता॰ CH- अनुमोदित APPROVED JWM/DO. AMM/TS.	GUNNER'S ARTICULATED SIGHT HOUSING GEAR (LEFT) DRG. No IRDE-2048/68		दिनांक DT. 02 12 2002 / पैमाना SCALE 2:1 धातु/सामग्री MATL AS ABOVE / व्यवहार TREAT AS ABOVE DA. No 31/2011 DT-24/10/11 / प्रतियाँ SHEETS 1 / प्रति संख्या SHT. No 1 AMENDMENTS OFD/D.O./002 / DRG. No. M.C.T.- 2105/1