DRG No.	IC	SS	S	AA	A	C	SST
	1804	01	08	00	00	000	00DA

GENERAL TOL. : FINE / MEDIUM / COARSE
CLASS TO IS: 2102

DRG. CONVENTIONS CONFIRM TO INDIAN STANDARDS
DIMENSIONS ARE IN mm UNLESS OTHERWISE STATED.

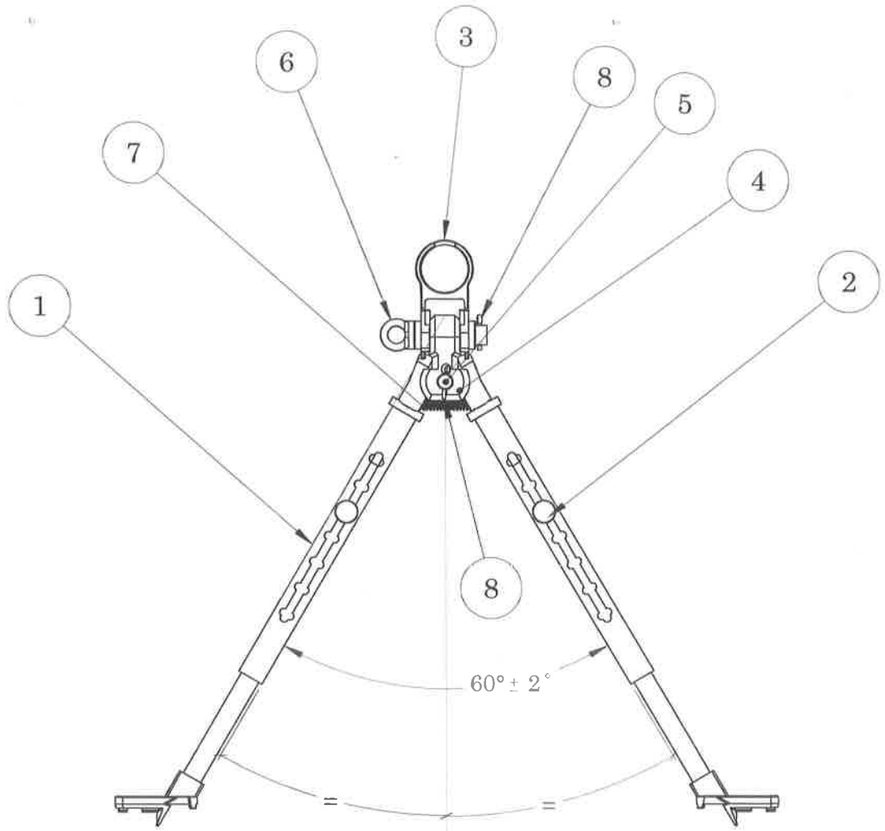

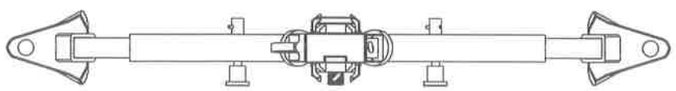

ITEM NO.	PART NUMBER	DESCRIPTION	QTY.
1	LEG LEFT BIPOD ASSEMBLY	1804 01 08 01 00 000 00DA	1
2	LEG RIGHT BIPOD ASSEMBLY	1804 01 08 02 00 000 00DA	1
3	HOUSING SLEEVE BIPOD	1804 01 08 00 00 001 00DA	1
4	SLEEVE BIPOD	1804 01 08 00 00 002 00DA	1
5	PIN TORSION BIPOD	1804 01 08 00 00 003 00DA	1
6	SCREW AXIS BIPOD	1804 01 08 00 00 004 00DA	1
7	SPRING BIPOD	1804 01 08 00 00 005 00DA	1
8	COTTER PIN	STANDARD COMPONENT	2

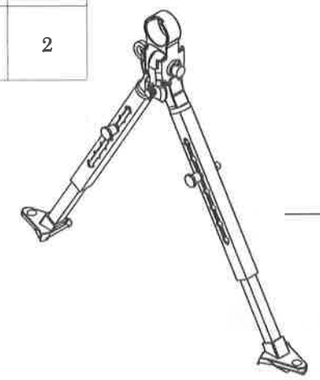

Sr. No.	DATE	AUTHORITY	BRIEF RECORD	ZONE	CD	GO
					SIGN	

DRN: HARSH
SIGN:
DATE: 04/09/2020
CHECKED

MATERIAL:

APPD.
DATE: 04/09/2020
FOR DIRECTOR

PROTECTIVE FINISH:

SEALED
DATE:

SHEET SIZE: A3
SCALE: 1:2

EST. MASS
approx. 677 gm

TITLE:

BIPOD ASSEMBLY

DESIGN AUTHORITY
ARDE
PUNE 411021

DRG No.	IC	SS	S	AA	A	C	SST
	1804	01	08	00	00	000	00DA

LMG	PART No.	DS CAT No.	AHSP