DRAWING CONVENTIONS CONFORM TO JSG : 0104
DIMNS. ARE IN mm. | GEN. TOL. 'MEDIUM' IS: 2102

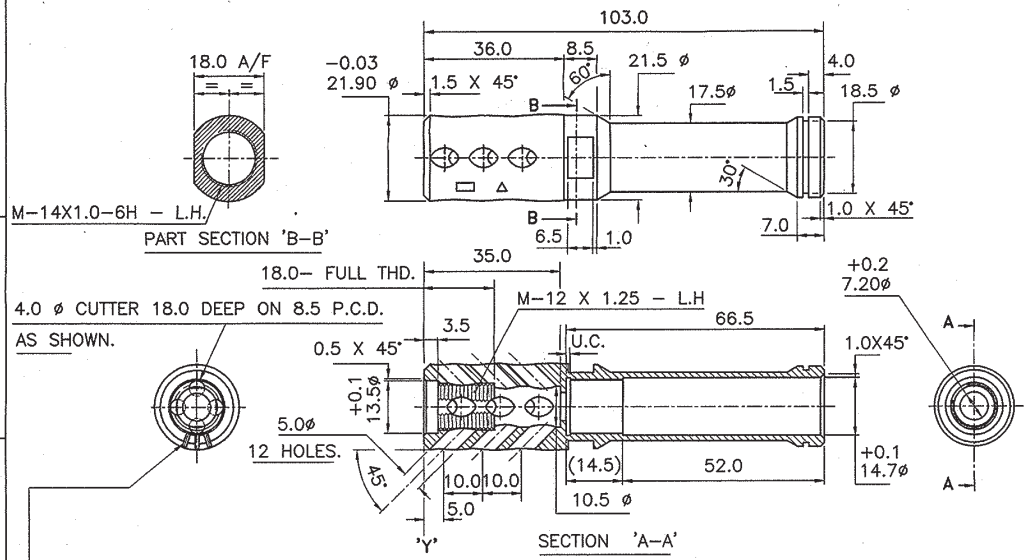

RFI.SK.- 7770-S

MATERIAL:- STEEL BS:970 PART 1:1983, GD.708 M 40.

H.T./HARDNESS:- HARDENED AND TEMPERED TO 250 TO 300 H.V.

NOTE:- SUFFICIENT ANTI-RUST PRESERVATIVE SHOULD BE APPLIED DURING SUPPLY.

TO BE MARKED ON COMPONENT IN 2 mm. LETTER SIZE.

▭ - Yr OF Mfg.
△ - MANUFACTURER'S CODE
D.S.CAT. NO

MATL.:- AS ABOVE.	ALL DIMENSIONS ARE IN MILLI METRE IMPORTANT DIMENSIONS MARKED THUS ⊕ INFORMATION MARKED THUS † TO BE MARKED ON

TITLE	2005	NAME	DATE
FINISH DRG. (WITHOUT PHOSPHATING)	DESIGNED		11.2.05
	DRAWN		
ORDNANCE FACTORY BOARD RIFLE FACTORY ISHAPORE — SCALE :- 1:1	CHECKED		
	APPROVED	JT.GM/ASSY	18-2-05
RIFLE 5.56 mm. FLASH ABSORBER	DRG NO:- RFI.SK.- 7770-S		
D.S.CAT.NO.-1005-007739 (ARDE SK 3143/40)	SHEET- 1	OF- 1	

(REF.:- MPM MEMO NO.:- 8205/F.A./MPM/GR-II/01 DT. 10.02.05 ADDRESS TO JT.GM/ASSY THROUGH JT.GM/MPM.)