Ritningsändring	–	G	H	J	K
Produktutförande	F	G	H	–	K

INDIGS SURFACE COATING :-
BLACK OXIDIZING AS PER IS : 11826 ; 86, CLASS ' B '
BLACK OXIDE COATING SHALL ALSO MEET THE REQUIREMENTS AS PER IS : 13212 : 91, CLAUSE 4.3 (FIG IC) IN ADDITION TO REQUIREMENT OF IS : 11826 : 86

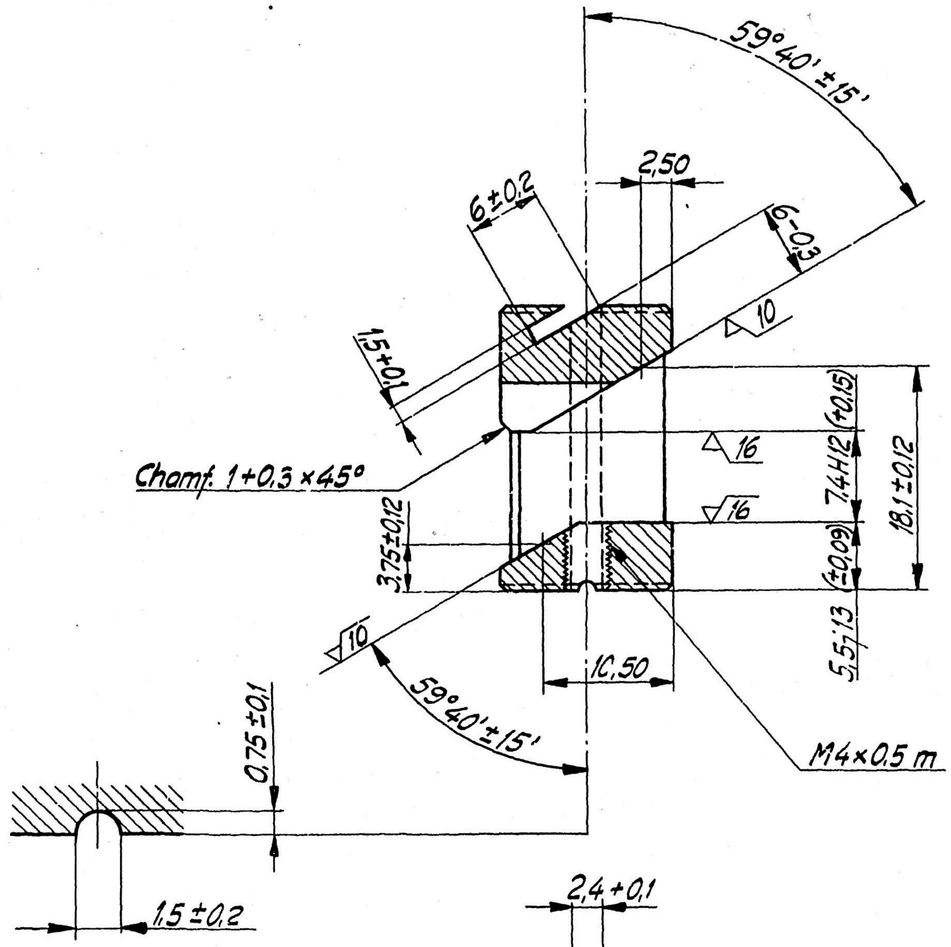

Scale 5:1

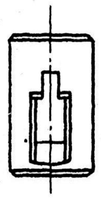

Scale 1:1

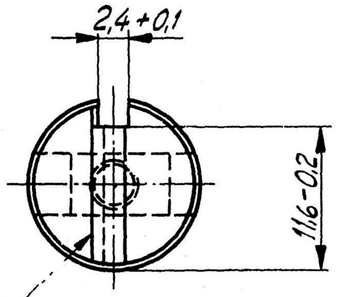

This edge deburred

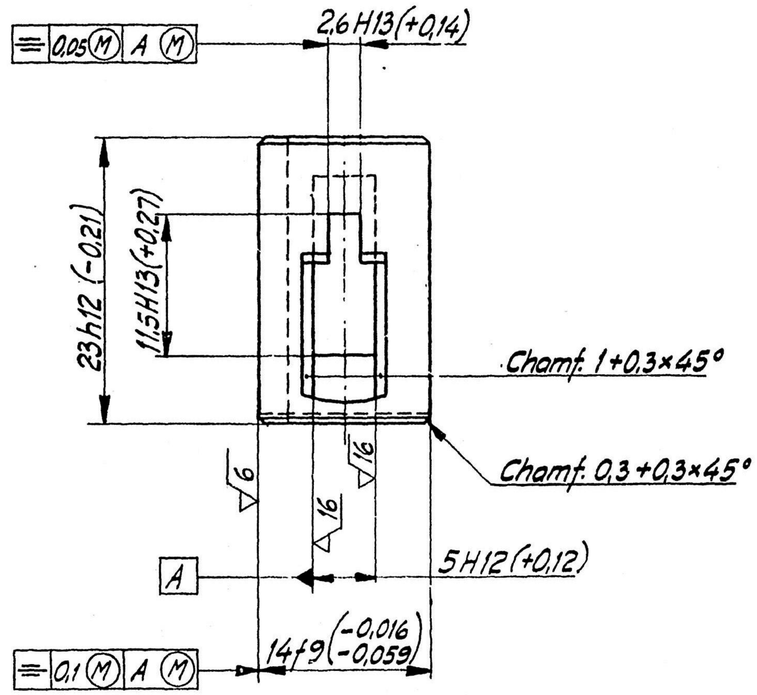

16-1-08	19106-W	OLD MATL RESTORED ERRATA TO DC No. 19106-W DT. 16-1-08		
4-8-09		SCANNED & PRINTED WITHOUT CHANGE		
DATE	AUTHORITY	AMENDMENTS	SIG AHSP	SIG DO

PREV DC :- 15090-W, 17148-W, 18119-W, 18834-W & 19106-W. DT. 16-01-08.

DRG SEALED :- 15090-W DT 25-7-77	SCANNED PKA	CHECKED :- JLC	C/D'MAN :-

C Q A (W), JABALPUR

Ritad	Gransk.	Kop.	Godk.	Konstr.	Vyplaceringsmetod	Skala
IT		IT			europeisk	2:1
Datum 9.12.63	Stand gr.	Kop. gr.	Datum		Ersätter	

ANTAL / PRODUKT: 1
MATERIALKVALITÉ: Steel SIS 1770
VÄRMEBEHANDLING: Hardened and tempered to Rc 45 - 50
YTBESKAFFENHET: ▽25 all over except where stated
YTBEHANDLING: Black oxidized and oiled
GRADNING: ENL. FFV 66
LÄGESMATT: ENL. ~~FFV 213~~ SMS 1922

MATL IN INDIA : IS : 4072 : 1975 : 70C60R ~~80C60R~~
BS : 970 Pt 5, 070 A72 OR 070A78

PRODUKT 84 mm RCL M2 (84mm ROCKET LAUNCHER) – IN INDIA
NAMN Firing pin फायरिंग पिन

FÖRSVARETS FABRIKSVERK
CARL GUSTAFS STADS GEVÄRSFAKTORI

Gf 125089