DRG CONVENTIONS CONFORM TO IS: 696
DIM. ARE IN mm
GEN TOL.:-1

PART No. 1QX 815

DC I 33613-A

DIMENSIONS MARKED * TO BE ACCURATELY WORKED TO.

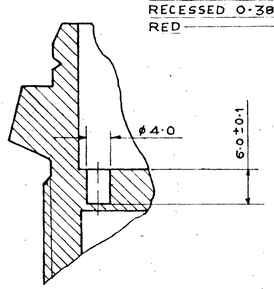

PART SECTION 'X X'

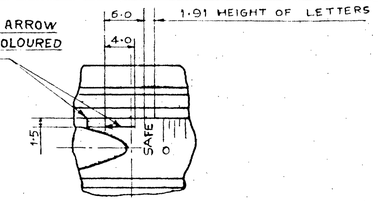

SAFE MARK DETAIL

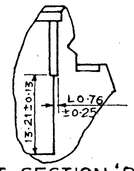

PART SECTION 'DD'

NOTE:-

TOLERANCE ON UNTOLERANCED DIMENSIONS FOR
ONE DECIMAL PLACE ± 1·3
FOR TWO OR MORE DECIMAL PLACE ± ·13
TOLERANCE ON UNTOLERANCED ANGLES
FOR DEGREES ± 30'
FOR DEGREES AND MINUTES ± 5'

PROTECTIVE TREATMENT :-

BODY TO BE TINPLATED ALL OVER TO BS 1872. CLASS E AND GRADUATED FLANGE LACQUERED AFTER TINNING.

THESE 3 RECESSES MAY BE OMITTED IF DESIRED AND ONE RECESS SUBSTITUTED, SEE ALTERNATIVE METHOD OF MANUFACTURE

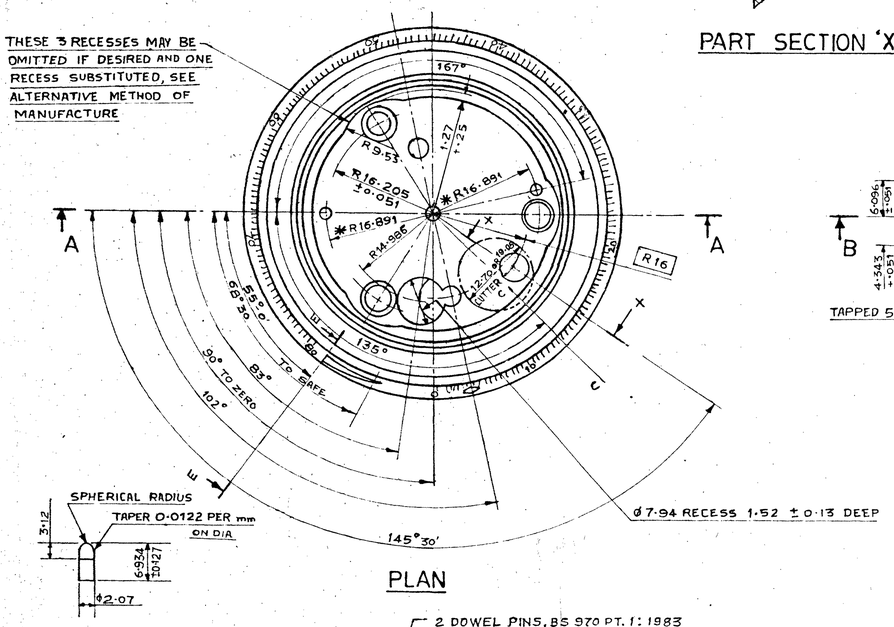

PLAN

DETAIL OF DOWEL PIN

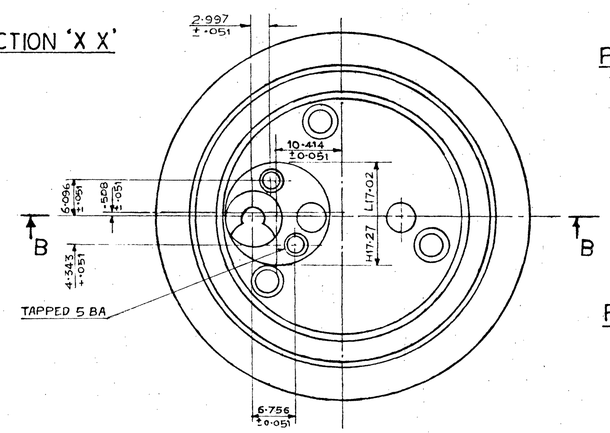

INVERTED PLAN

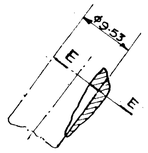

PART SECTION 'F F'

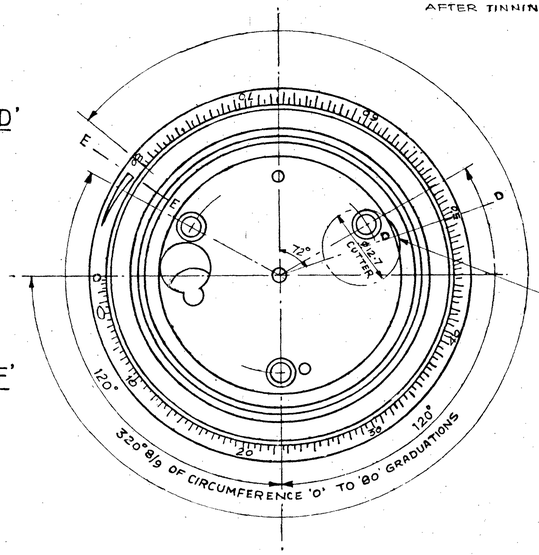

THIS RECESS MAY BE OMITTED IF MECHANISM IS FULLY WOUND BEFORE ASSEMBLY.

PLAN SHOWING ALTERNATIVE METHOD OF MANUFACTURE

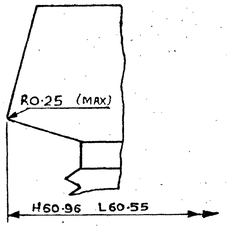

2 DOWEL PINS, BS 970 PT. 1: 1983 G. 220 M07 COLD DRAWN TO BE A DRIVING FIT AND TO BOTTOM IN HOLES HOLES TO BE C'SK ·51 DEEP

PART SECTION 'E E

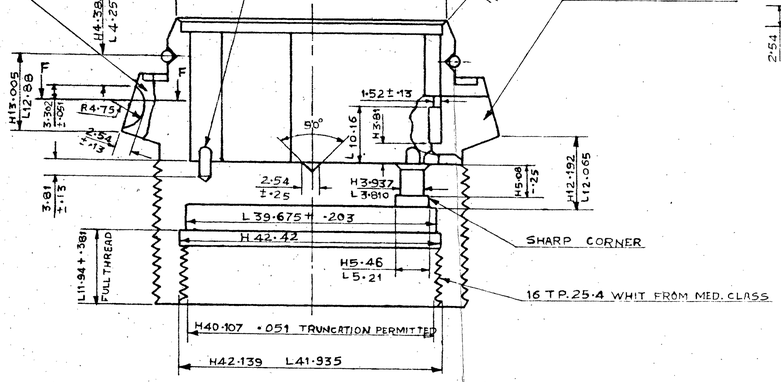

SECTION 'A A'

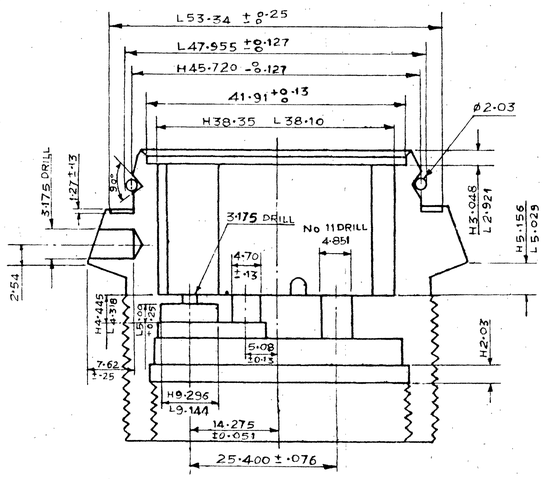

SECTION 'B B'

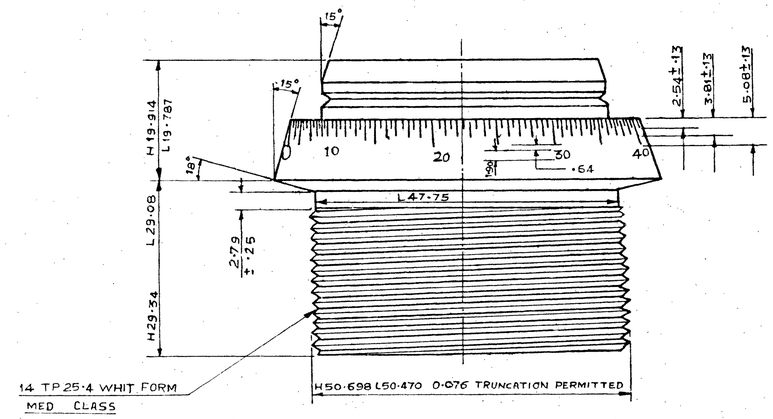

ELEVATION

R No	DATE	AUTHORITY	REVISION	ZONE	AHSP	DO SIGN
5.	30-8-03		SCANNED WITHOUT CHANGE.			
4.	17-9-90	DC 34943-A	PROTECTIVE TREATMENT ADDED			
3.	28-6-88	D.C. 34416-A.	IN SECTION 'A-A' DOWEL PINS MAT'L. SPEC AMENDED			
2.	27-6-87	DCI. 34168-A	DS CAT No ADDED			
1	13-7-84	D.C.I. 33613-A	DRG. SEALED PROVISIONALLY.			

DRG. SEALED:- 13-7-84 (PROV)

DRN. CD | CHD. | TRD. GDK | COMP.
PASSED | SCALE:- 2:1
EST. MASS:-
APPROVED FOR DIRECTOR | GAUGE SCHD:-
DATE - 14-5-84
MATL:- BRASS TO SPEC. BS: 2874 Cz 121.
PROTECTIVE FINISH:- AS ABOVE
APPD. FOR D.C.I.(A)

ASSY DRG. 1QX 69 GE
DESIGN AUTHORITY, ARDE PUNE-21
DESIGNER'S REF. ARDE 2014
DET. 1 | SHT | SHTS
PART No 1QX 815
D.S.CAT No 1390-000523
AHSP:- C.I.(A) KIRKEE

BODY