20-12-124-8

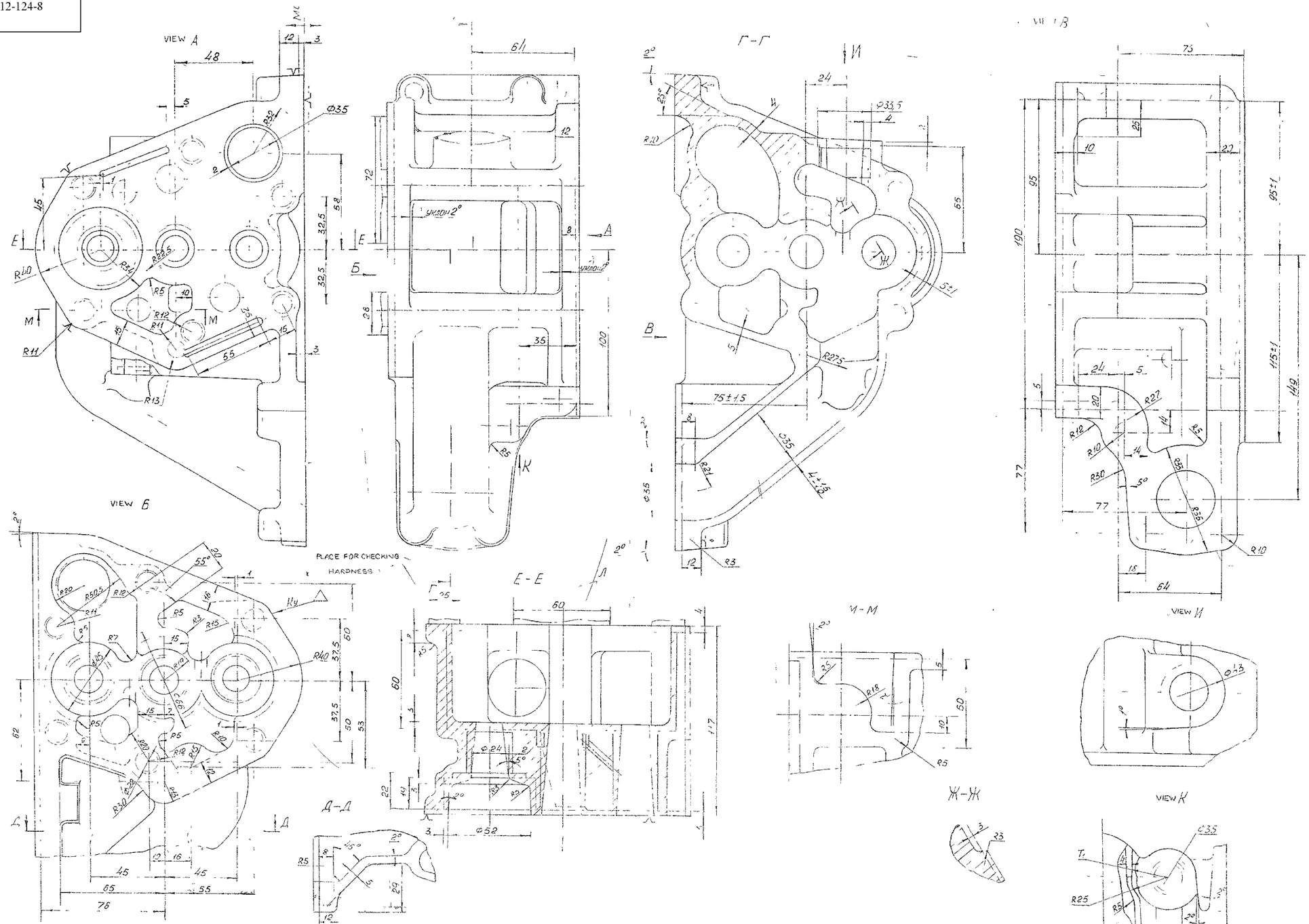

1 CASTING IN METAL MOULD

2 REQUIREMENTS FOR CASTING AS PER TTAJ 310-5165 AND OST 3 4565-80.

3 HARDNESS HB≥80

4. COATING ON UNMACHINED SURFACES PHENOL-FORMAL--DEHYDE LACQUER JI6C, GOST 901-78 V.6/1-C

5 UNSPECIFIED CASTING RADII R3-5 MM, DRAFTS 2°

6 SHIFT OF INTERNAL CONTOUR RELATIVE TO EXTERNAL CONTOUR UP TO 0 75 MM IS ALLOWED

7 TECHNOLOGICAL MARKS ARE ALLOWED

8 LOCAL THINNING OF BRANCH PIPE WALL UP TO 2 5 MM IS ALLOWED

10 Л-UNDERCUT RISER SHOULD NOT EXCEED 5 MM

11 TOOL MARKS ARE ALLOWED ON SURFACE T_1

12 CASTING DRAWING IS DRAWN UP FOR THE WORKING DRAWING OF COMPONENT 20-12-124-8

ISSUE	DATE	REFERENCE	20-12-124-8		
			OIL PUMP BODY CASTING	LETTERS / MASS / SCALE 1:1	
APPROVED				SHEET 1 SHEETS 1	
CHECKED					
DRAWN			ЛЛ 9 GOST 2685-75		