D.S.CAT NO. 1005-003204

DRAWING CONVENTIONS CONFORM TO JSG-0104.
DIMNS. ARE IN mm. | GEN. TOL.
FOR EXPLANATION SEE CSAID NOTE SHT. NO. 1

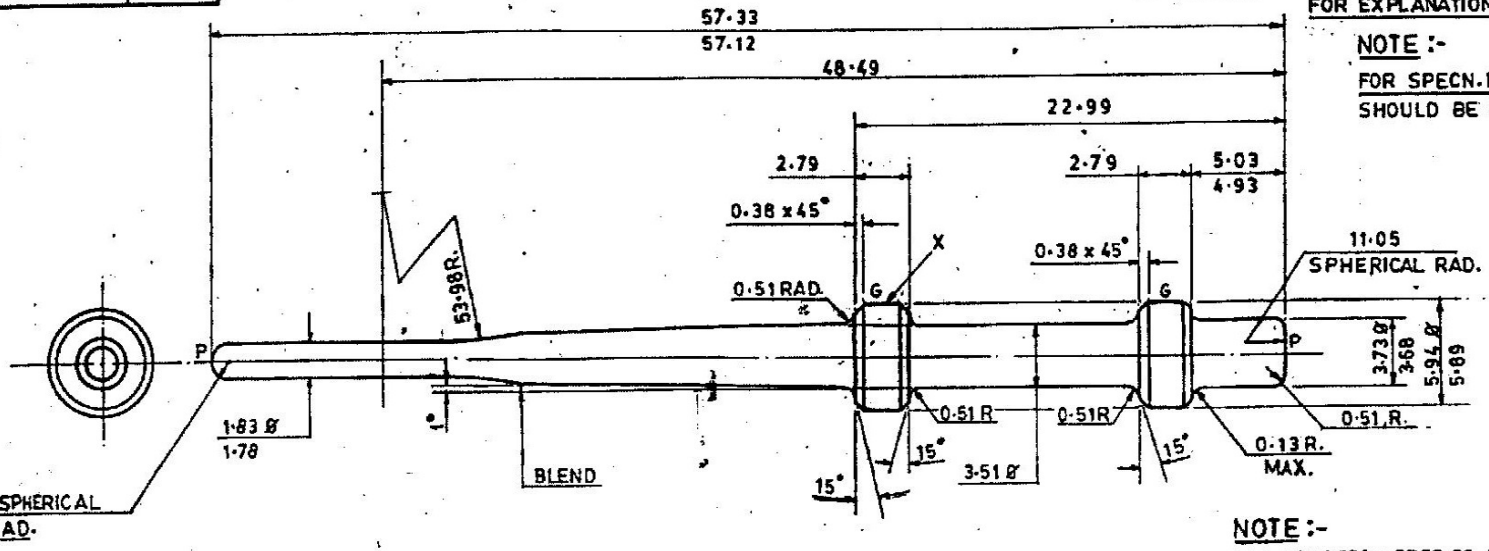

NOTE :-
FOR SPECN. LATEST ISSUE SHOULD BE FOLLOWED.

NOTE :-
(a). MACROETCH TEST TO ASTME 381-1984 WILL BE AS PER COL. (C) OF SL. NO. 1 OF CQA(SA) NOTE SHEET NO. 1.
(b). NMIR TEST TO IS:4163 WILL BE AS PER COL. (C) OF SL. NO. 3 OF CQA(SA) NOTE SHEET NO. 1.

WHERE TOLERANCES ARE NOT SHOWN
i). DIMENSIONS IN WHOLE NUMBER ±0·76mm.
ii). DIMENSIONS WITH ONE DECIMAL PLACE ±0·25 mm.
iii). DIMENSIONS WITH TWO DECIMAL PLACES ±0·13mm.

FINISH :-
TO BE POLISHED WHERE MARKED 'P'
TO BE GROUND WHERE MARKED 'G'

JWM/MPM
CERTIFIED COPY OF
PROFILE OUTGAUGE SCHEDULE
THIS DATE 16-12-17
RIFLE FACTORY, ISHAPORE

METRIC

02-05-16	26024-SA	MATERIAL AMENDED.			
20-2-97	23693-SA	PROFORMA CHANGED, ACTUAL SIZE DRG. DELETED, CONVENTION NOTE ADDED, MATL. AMENDED, NEG. RE-TRACED & DRG. RE-SEALED			
		PREVIOUS D.C.NOS. 10688-SA, 11258-SA, 11886-SA, 14460-SA, 16050-SA, 16210-SA, 19442-SA, 19963-SA, 21934-SA, 22195-SA, 22269-SA, 22639-SA & 22802-SA			COPY
DATE	AUTHY.	BRIEF RECORD	ZONE	I/C.D.O.	G.O. SIGN.

SEALED :- D.C. NO. 11258 -SA, DT. 5.5.72.

NOMENCLATURE :- PIN, FIRING.

DRN. | CHD. | TRD. | COMP.
SCALE :- 4:1 | EST. MASS
APPROVED DT. 2.8.67.
DT. 21-2-97 I/C; D.O.
NEG. RE-TRACED

MATERIAL :- IS: 3748:1990 DESIGNATION 75 T6 OR DESIGNATION 80 T6.

H.T./HARDNESS :- HARDEN AND TEMPER GENERALLY TO A HV. 500-550 EQUIVALENT ROCK WELL 'D' 62-65 MEASURED ON ROUND SURFACE TESTED AT POINT 'X'

PROTECTIVE FINISH :- PHOSPHATE TO SPECN. JSS: 0465-01:1988 CLASS II (ACCELERATED), OIL FINISH.

AHSP. CQA(SA), ICHAPUR
ASSY. 1005-003195
DGNR'S REF. CISA/333/4/3
PART NO.
DRG. NO.
D.S. CAT. NO. 1005-003204

Create PDF files without this message by purchasing novaPDF printer (http://www.novapdf.com)

R-2 C-2