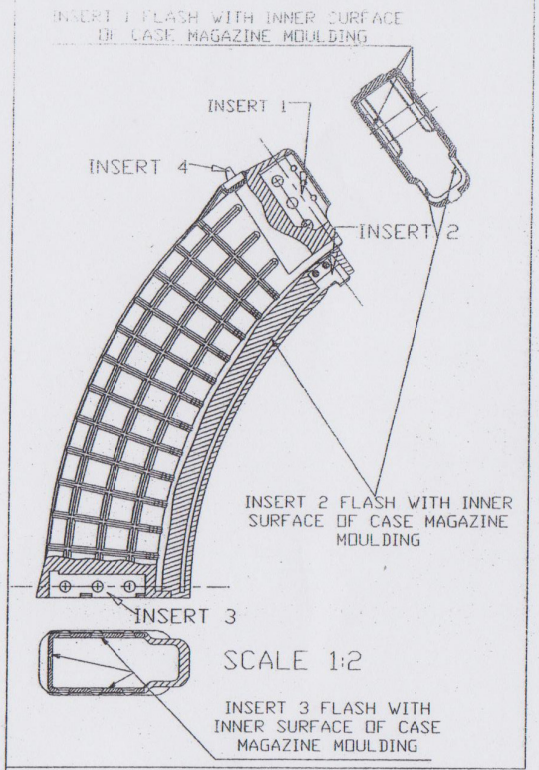


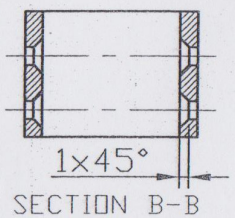


SECTION B-B
SCALE 2:1

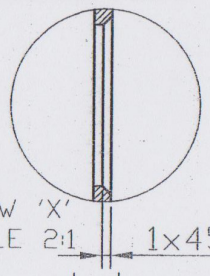


VIEW 'X'
SCALE 2:1

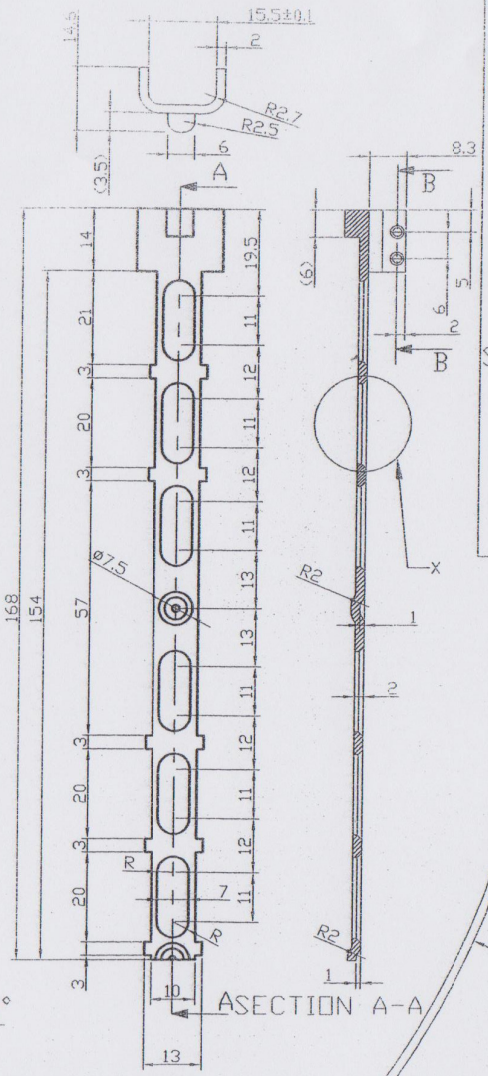


INSERT-2

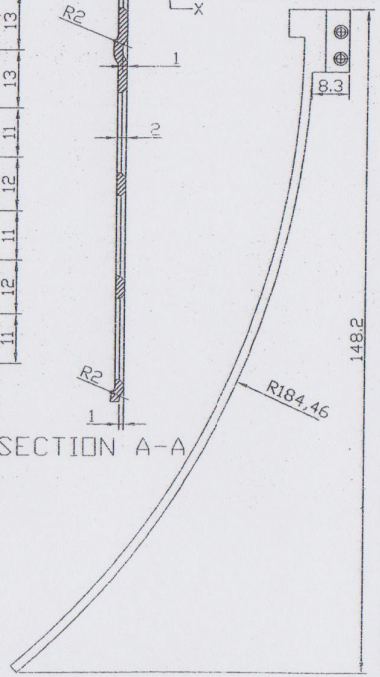


AFTER BEND

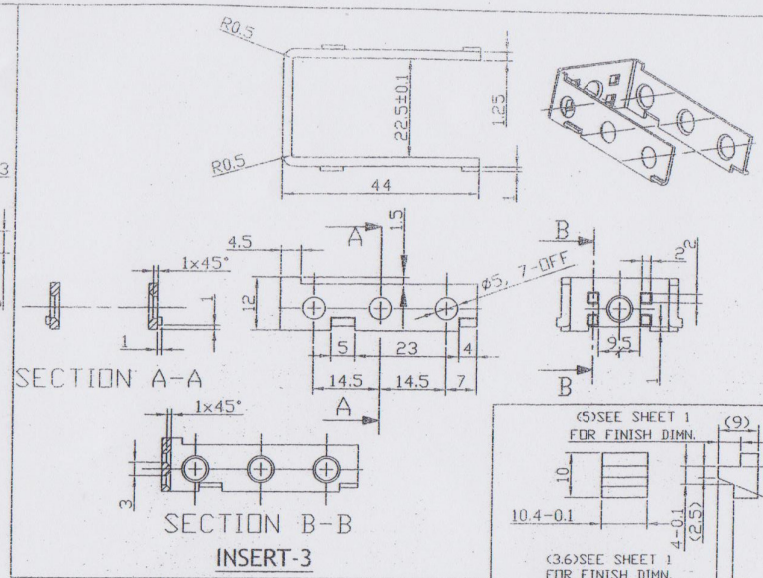


INSERT-3

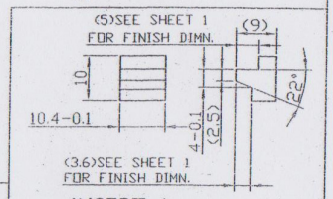


INSERT-4

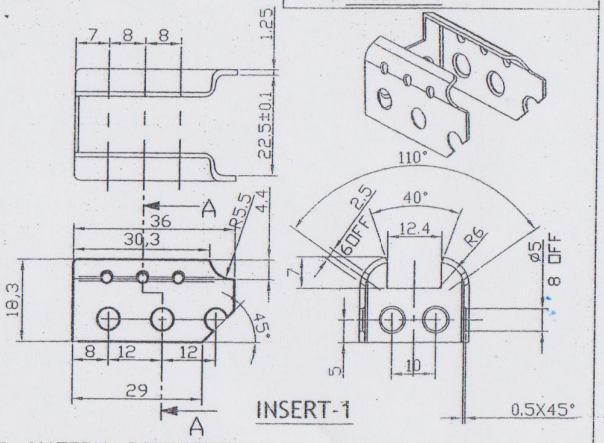


INSERT-1

NOTE:- MATERIAL FOR INSERT 1,INSERT 2,INSERT 3&4 - EN-42

| DATE | DC RFI NO | DESIGN AMENDMENT | SIGN |
|---|---|---|---|
| 24/05/18 | 11C/012/18 | FOR / READ<br>DIMN. 64.3-0.2 / DIMN. 66-0.2<br>DIMN. 28.6+0.2 / DIMN. 29.8-0.5<br>DIMN. 17.5-0.1 / DIMN. 17.2-0.2<br>DIMN. 12.6+0.2 / DIMN. 12.4+0.2<br>DIMN. 7.5+0.1 / DIMN. 8.5+0.5<br>DIMN. 27.5+0.5,67.4-0.2,3.5±0.1,10-0.2 ADDED<br>INSERT-1DIMN. R3.2 / DIMN. R6<br>DESIGN OF INSERT-4 CHANGED | |

प्रमाणित प्रति / CERTIFIED COPY OF
ड्राइंग / लेआउट / गेज शिडयूल / DRG/LAYOUT/GAUGE SCHEDULE
दिनांक / AT THIS DATE
सी डी डी / CDD
राइफल फैक्टरी, ईशापुर
RIFLE FACTORY, ISHAPORE

INDIAN ORDNANCE FACTORIES
RIFLE FACTORY
ISHAPORE

| 2018 | NAME | DATE |
|---|---|---|
| DESIGNED | | 28/5 |
| DRAWN | | |
| CHECKED | | 08/5/18 |
| APPROVED | | |

CASE MAGAZINE MOULDING
RIFLE 7.62 mm ASSULT RIFLE
GHAATAK

SCALE :- 1:1 (1:2)

DRG NO:- AR/024/01-RFI

SHEET- 2 OF- 2