OFB

NOTES:

1. CHAMFERED 0.3x45°

THIS DRAWING/DOCUMENT CONTAINS COMPANY PROPRETARY INFORMATION USE OR DISCLOSURE IN WHOLE OR IN PART SHALL NOT BE MADE WITHOUT THE WRITTEN PERMISSION OF OFB

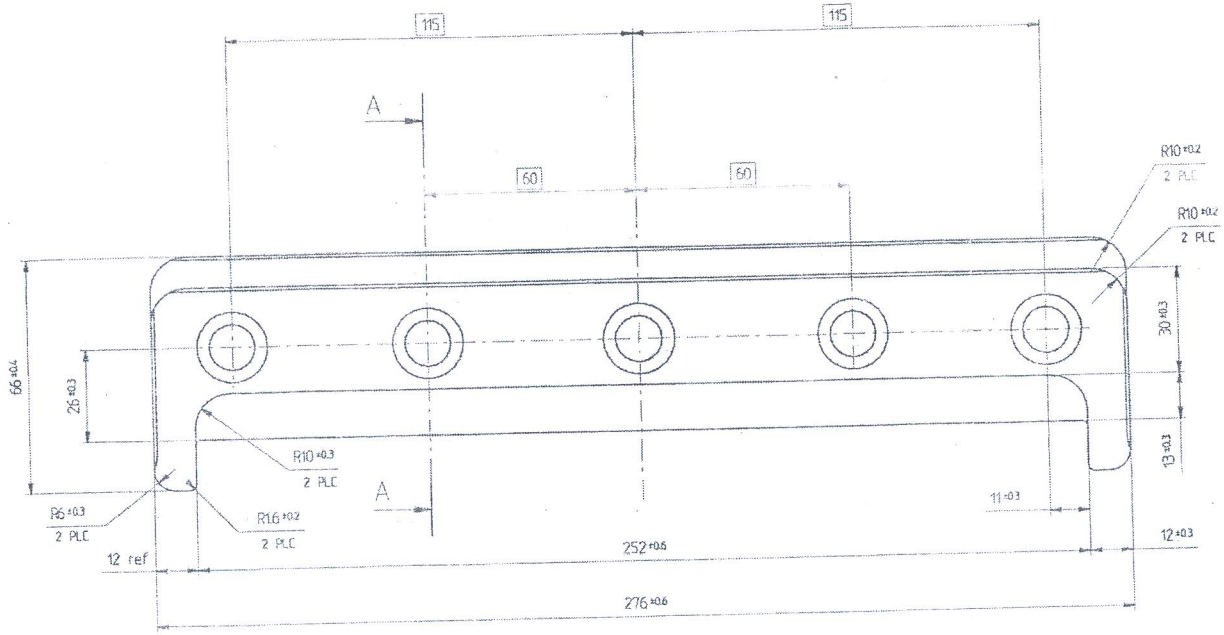

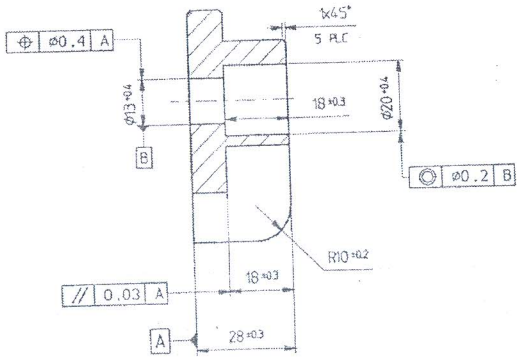

SECTION A-A

केवल निर्यात के लिए
मूल्य पत्र सं. 380291
04-05-2018

DATE: 01.01.2007	ALTERNATE INTERNATIONAL MATERIAL (IF ANY): BS: 970 Pt-183 GDE 709 M40. Heat treated to "T" Condition. A separate test bar shall be heat treated to achieve the hardness 30-35 HRC. (REF: CQA(W) JABALPUR L.No. 283102/CQA(W)/011 Dt. 17 JULY 2002)

6.3

MACHINING INSTRUCTIONS

UNSPECIFIED TOLERANCES FOR DIMENSIONS AND ANGLES
DIMENSIONS
ANGLES

HEAT TREATMENT: HRc 30-35

FINISH: Phosphate coating accordingl to to 000-P-16232 TYPE M cl 2.

MATERIAL: 76x285
PLATE 30 DIN1543-42CrMo4

18912-W
Dt. 27-5-2005
DRAWING SEALED
CQA (W), JABALPUR

UPDATED
SHARANG 130/155MM_UG_OFB_SLB
PART NO.
Sh: 01:
1:1 SCALE
A2 SIZE
ASSEMBLY 176-1002
NAME DEFLECTOR

DRAWN
CHD DRAWING
APPROVED
DO/DG DIR/CDC
ORDNANCE DEVELOPMENT CENTRE
OFB, KANPUR
PART NO. 166-471

PART NO. 166-471

P.O. No. 1960 ... 1-04