(14)

DRG NO	0204	03	03	15	23	000	00DE
	IC	SS	S	AA	A	C	SST

GEN.TOL.MEDIUM/COARSE/FINE CLASS TO IS 2102

DRAWING CONVENTION CONFIRM TO INDIAN STDS. DIMN.IN mm UNLESS OTHERWISE STATED

NOTES :-

1) REMOVE ALL SHARP EDGES AND BURRS

1) * ALL WELDINGS SHOULD BE PREFERABLY TIG WELDING

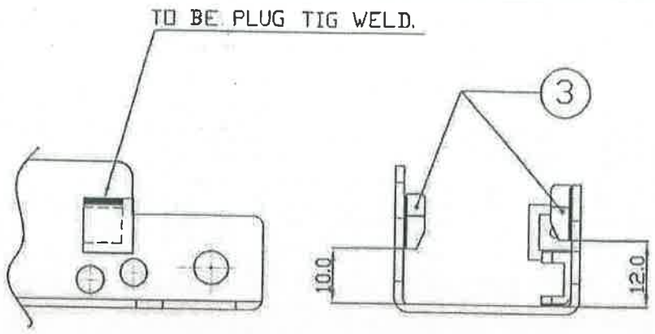

PART VIEW

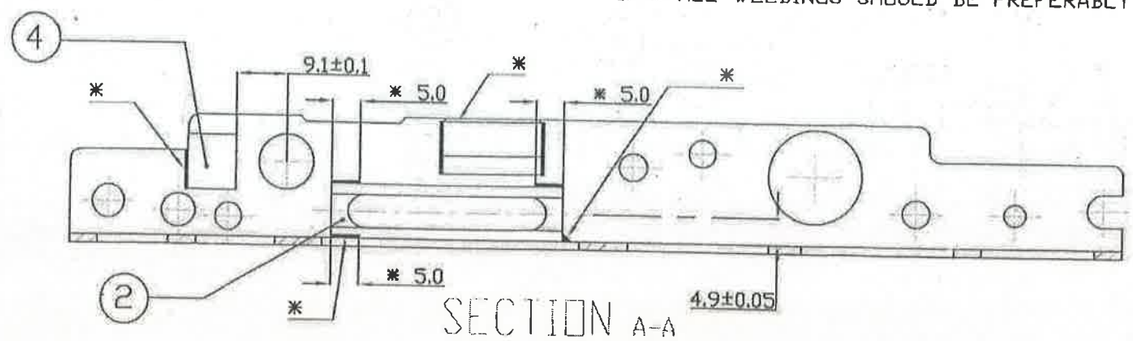

SECTION A-A

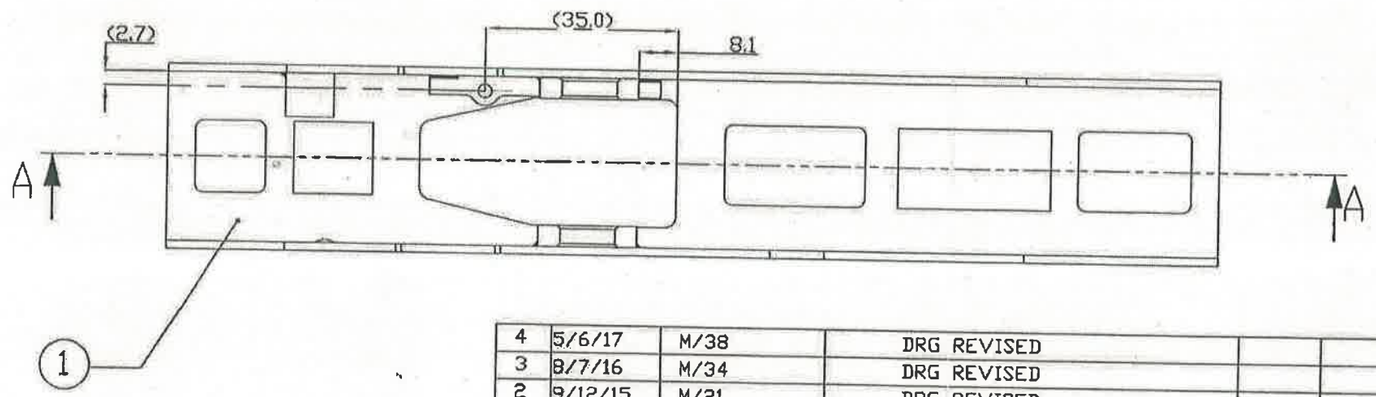

आरेखण की सही प्रमाणित प्रतिलिपि दिनाँक.....
Certified as correct copy of drg. on.....
Jr. Works Manager
STANDARD CELL

SR NO	NOMENCLATURE	DRG. NO	QTY
1	BODY HOUSING LOWER	0204 03 02 18 29 001 00DE	1
2	HOUSING LEVER CATCH MAGAZINE	0204 03 02 18 29 002 00DD	1
3	GUIDE PIECE MAGAZINE	0204 03 02 18 29 003 00DB	2
4	HOUSING PLUNGER	0204 03 02 18 29 004 00DF	1

R No	DATE	AUTHORITY	BRIEF RECORD	ZONE	CD	GD
4	5/6/17	M/38	DRG REVISED			
3	8/7/16	M/34	DRG REVISED			
2	9/12/15	M/21	DRG REVISED			
1	7/3/14	M/21	DRG REVISED			

SIGN

DRN PRANAV CHD

APPD DATE 05/06/2017 ADD DIRECTOR

SEALED DATE

SCALE 1:1 EST MASS

DESIGN AUTHORITY ARDE

MATERIAL : ----

PROTECTIVE FINISH :- PHOSPHATED TO SPECN IS:3618-1966,CLASS-'B'

TITLE

LOWER BODY WELDING ASSEMBLY

DRG NO 0204 (IC) 03 (SS) 03 (S) 15 (AA) 23 (A) 000 (C) 00DE (SST)

PART NO DS CAT NO AHSP

05/06/2017

CONTROL COPY No. 02

GEN. TOL. FINE/MEDIUM/COARSE CLASS TO IS:2102	DRG. CONVENTIONS CONFIRM TO INDIAN STD. DIMN. IN mm UNLESS OTHERWISE STATED

DRG. No. 0204 03 03 02 15 000 00DB
IC SS S AA A C SST

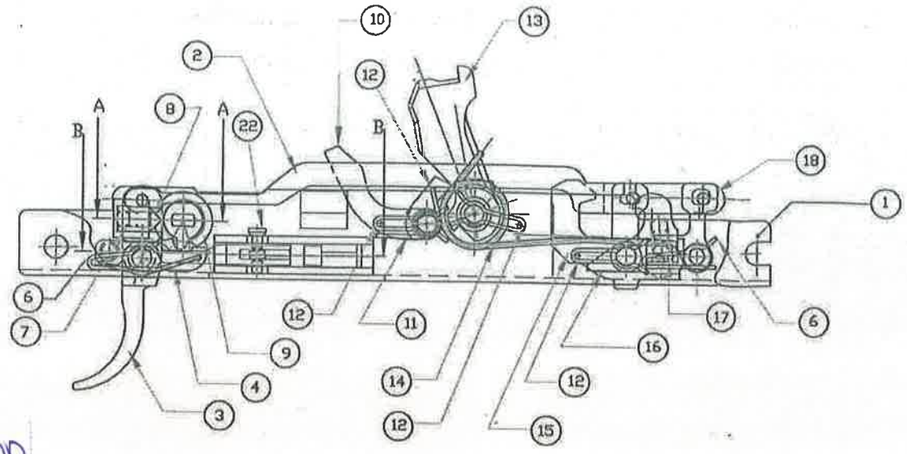

SR. NO	NOMENCLATURE	DRG. NO.	QTY.
1	LOWER BODY WELDING ASSEMBLY	0204 03 03 15 23 000 00DB	1
2	LINK	0204 03 02 18 30 001 00DF	1
3	TRIGGER FRONT	0204 03 02 02 18 001 00DC	1
4	SPRING TRIGGER FRONT	0204 03 02 02 18 002 00DA	1
5	PIN TRIGGER, HAMMER AND SEAR SAFETY	0204 03 02 02 18 003 00DA	4
6	SPRING LOCKING PIN TRIGGER FRONT AND PIN AUTO SEAR	0204 03 02 02 18 004 00DA	5
7	SPRING PLUNGER WHEEL LOCK	0204 03 02 02 18 005 00DA	1
8	PLUNGER WHEEL LOCK	0204 03 02 02 18 006 00DE	1
9	WHEEL LOCK	0204 03 02 02 18 007 00DC	1
10	SEAR SAFETY	0204 03 02 02 18 008 00DC	1
11	SPRING SEAR SAFETY	0204 03 02 02 18 009 00DA	1
12	SPRING LOCKING PIN TRIGGER, MACHANISM	0204 03 02 02 18 021 00DA	3
13	HAMMER	0204 03 02 02 18 011 00DD	1
14	SPRING HAMMER	0204 03 02 02 18 012 00DA	1
15	TRIGGER REAR	0204 03 02 02 18 013 00DC	1
16	SEAR	0204 03 02 02 18 014 00DD	1
17	SPRING SEAR	0204 03 02 02 18 015 00DB	1
18	AUTO SEAR	0204 03 02 02 18 016 00DC	1
19	PIN AUTO SEAR	0204 03 02 02 18 017 00DA	1
20	LEVER CATCH MAGAZINE	0204 03 02 02 18 018 00DD	1
21	SPRING LEVER CATCH MAGAZINE	0204 03 02 02 18 019 00DA	1
22	PIN LEVER CATCH MAGAZINE	0204 03 02 02 18 020 00DA	1

आरेखण की सही प्रमाणित प्रतिलिपि दिनाँक.....
Certified as correct copy of drg. on.....
कार्यशाला प्रबंधक
Jr. Works Manager
STANDARD CO. LTD.

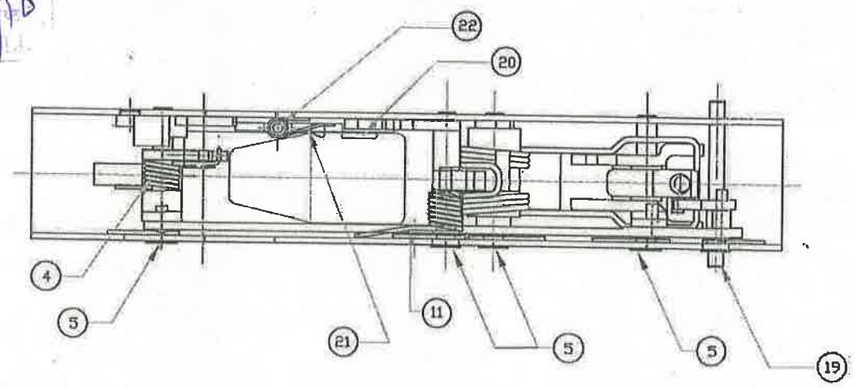

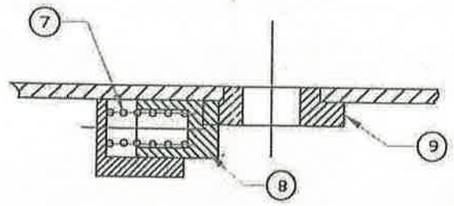

PART SECTION A–A

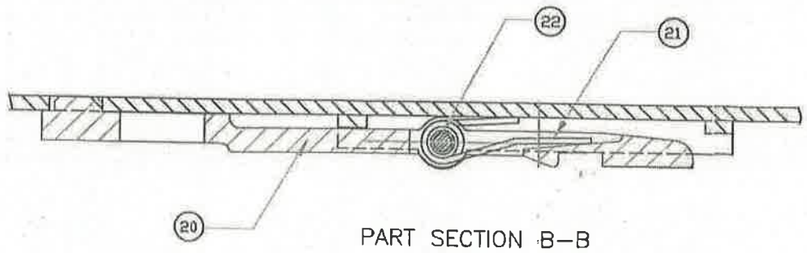

PART SECTION B–B

Sr. No.	DATE	AUTHORITY	BRIEF RECORD	ZONE	CD	GO
1	9/12/15	M-30	DRG. REVISED	–		

DRN. EMJ
CHD.
APPD. DATE 9/12/15 for Director
SEALED DATE
SCALE 1:1
EST. MASS
DESIGN AUTHORITY ARDE PUNE 411021
MATERIAL
PROTECTIVE FINISH
TITLE **BODY HOUSING LOWER & TRIGGER MECHANISM ASSY**

DRG. No. 0204 03 03 02 15 000 00DB
IC SS S AA A C SST

PART No.
DS CAT. No.
AHSP

05.01.16

48

DRG. No									
0 2 0 4	0 3	0 2	1 8	2 9	0 0 1	0 0 0 E
IC	SS	S	AA	A	C	SST

GEN. TOL. FINE/MEDIUM/COARSE CLASS TO IS:2102

DRG. CONVENTIONS CONFIRM TO INDIAN STD.
DIMN. IN mm UNLESS OTHERWISE STATED

NOTES :

1) REMOVE ALL SHARP EDGES AND BURRS
2) HARDNESS : 280–330 HV

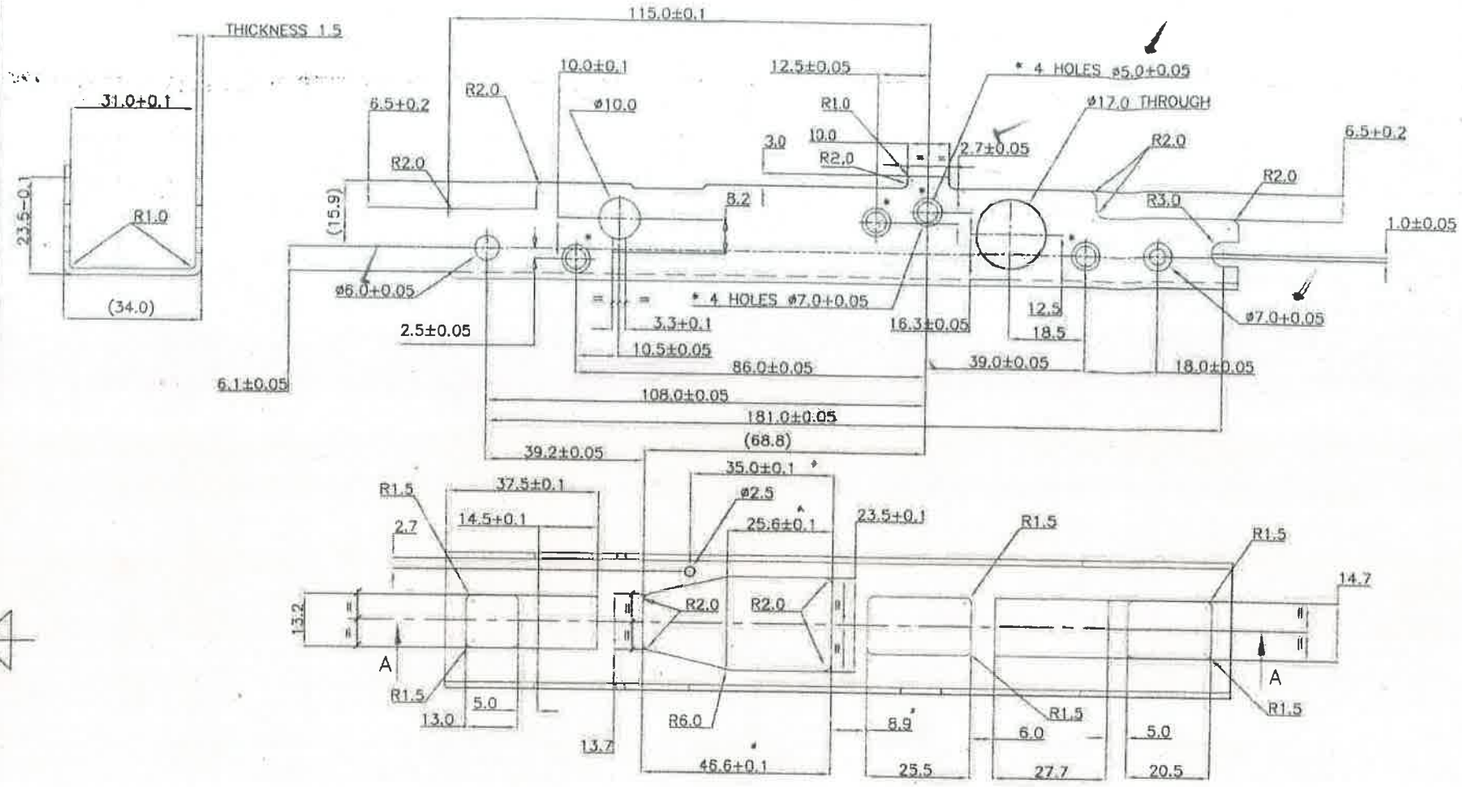

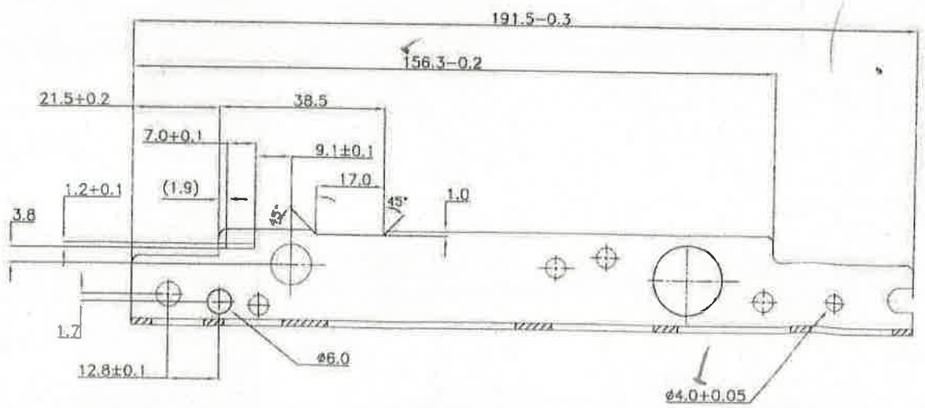

SECTION A–A
SCALE: 1:1

Sr. No.	DATE	AUTHORITY	BRIEF RECORD	ZONE	CD	GO
04	8/7/16	M/34	DRG REVISED	---		
03	7/3/14	M/21	DIMN 10.2±0.05 DELETED DIMN 6.1±0.05 ADDED DIMN (69.0) ADDED	B-6 C-2,3 C-5		
02	05/03/2013	M/20	DRG. REVISED			
01	05/01/2011	M/14	DRG. REVISED			

SIGN

DRN. PRANAV
CHD.
APPD. DATE 08/07/2016 for Director
SEALED DATE

MATERIAL:
STEEL TO IS :7226 –1974, Gd– CS–40 ANNEALED CONDITION

PROTECTIVE FINISH:
PHOSPHATED TO SPECN. IS:3618–1966, CLASS 'B'

SCALE 1:1
EST. MASS

DESIGN AUTHORITY
ARDE
PUNE 411021

TITLE
BODY HOUSING LOWER

DRG. No. 0 2 0 4 (IC) 0 3 (SS) 0 2 (S) 1 8 (AA) 2 9 (A) 0 0 1 (C) 0 0 0 E (SST)

PART No.
DS CAT. No.
AHSP

प्रमाणित की सही प्रतिलिपि
प्रतिलिपि दिनांक.....
Certified as correct copy
of drg. on.....
कार्यशाला प्रबन्धक
Jr. Works Manager
मानक प्रकोष्ठ
STANDARD CELL

DRG. No. 0 2 0 4 | 0 3 | 0 2 | 1 8 | 2 9 | 0 0 2 | 0 0 D E
IC SS S AA A C SST

GEN. TOL. FINE/MEDIUM/COARSE
CLASS TO IS:2102

DRG. CONVENTIONS CONFIRM TO INDIAN STD.
DIMN. IN mm UNLESS OTHERWISE STATED

Certified as correct copy of drg. on ..... Jr. Works Manager STANDARD CELL

NOTES: 1) REMOVE ALL SHARP EDGES AND BURRS
2) HARDNESS : 250–300 HV
3) ALT.MATERIAL :

MIM S7 (AISI EQUIVALENT)
HARDNESS : 500-600 HV

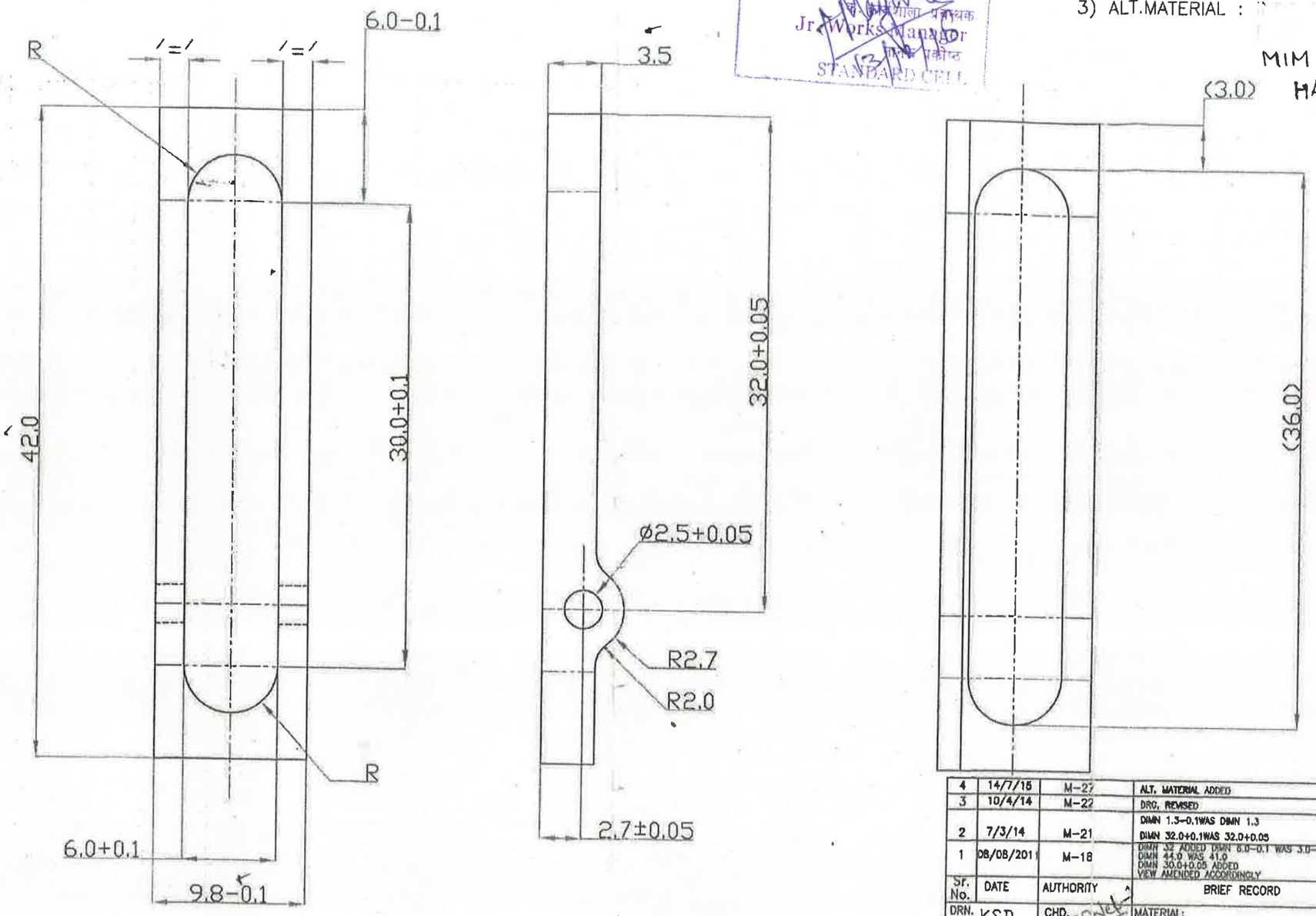

Dy verified on 14/3/16

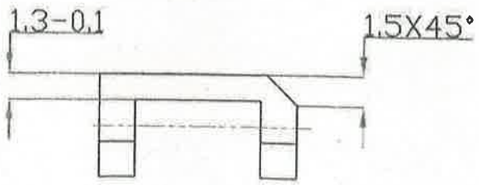

Latest Drg as on 10/12/15

Sr. No.	DATE	AUTHORITY	BRIEF RECORD	ZONE	CD	GO
4	14/7/15	M-27	ALT. MATERIAL ADDED	A-10/11		
3	10/4/14	M-22	DRG. REVISED			
2	7/3/14	M-21	DIMN 1.3–0.1WAS DIMN 1.3 DIMN 32.0+0.1WAS 32.0+0.05	G-3 C,D-5		
1	08/08/2011	M-18	DIMN 32 ADDED DIMN 6.0–0.1 WAS 3.0–0.1 DIMN 44.0 WAS 41.0 DIMN 30.0+0.05 ADDED VIEW AMENDED ACCORDINGLY	B,C-6 C-2 C-7 C-3		

SIGN

DRN. KSD
CHD. NGRNet
APPD. DATE 14/7/15 For Director
SEALED DATE
SCALE 5:1
EST. MASS

MATERIAL: STEEL TO IS: 5517–1993, Gd-40C8 (En-8)

PROTECTIVE FINISH: PHOSPHATED TO SPECN IS:3618–1966, CLASS 'B'

TITLE
HOUSING LEVER CATCH MAGAZINE

DESIGN AUTHORITY
ARDE
PUNE 411021

DRG. No. 0 2 0 4 | 0 3 | 0 2 | 1 8 | 2 9 | 0 0 2 | 0 0 D E
IC SS S AA A C SST

PART No. | DS CAT. No. | AHSP

DRG. No.	IC	SS	S	AA	A	C	SST
	0204	03	02	18	30	001	00DF

GEN. TOL. FINE/MEDIUM/COARSE CLASS TO IS:2102	DRG. CONVENTIONS CONFIRM TO INDIAN STD. DIMN. IN mm UNLESS OTHERWISE STATED

CONTROL COPY No. 7

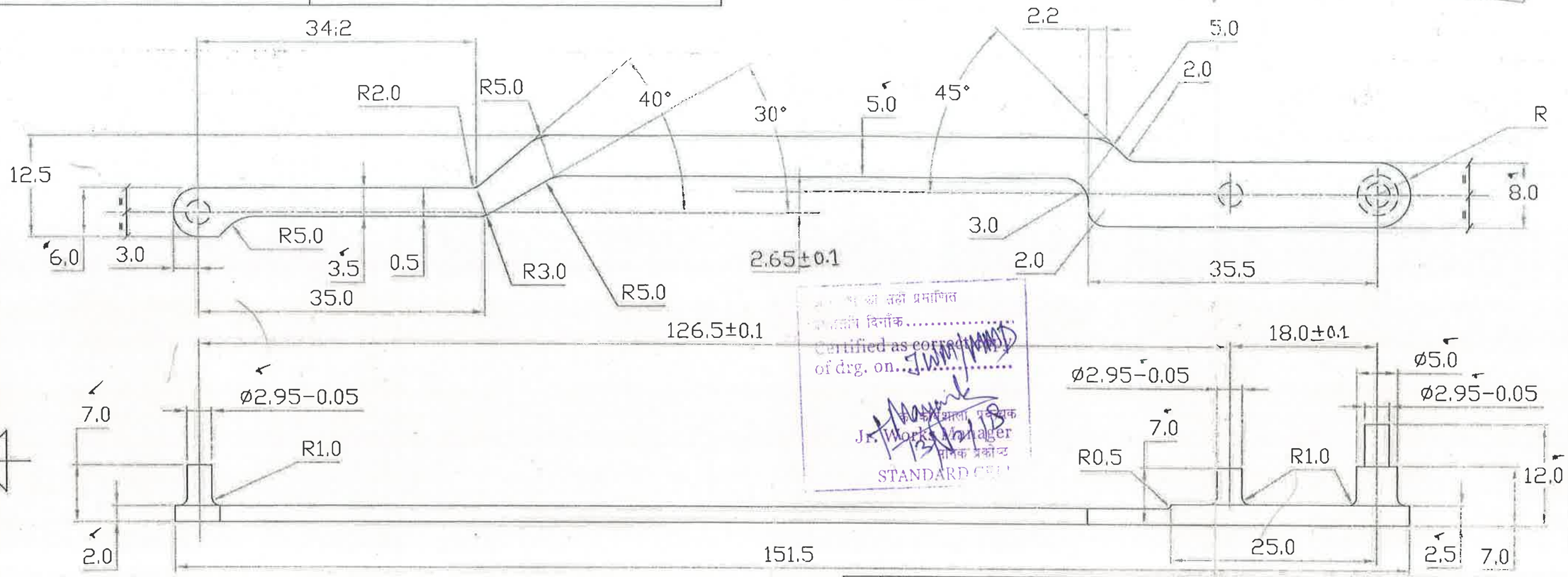

प्रमाणित
दिनांक.....
Certified as correct copy
of drg. on.....
J.K. Works Manager
STANDARD CELL

Sr. No.	DATE	AUTHORITY	BRIEF RECORD	ZONE	CD	GO
5.	28/05/2015	M−26	DRG REVISED			
4.	21/10/2014	M−25	DRG REVISED			
3.	10/04/2014	M−22	DIMN. 10.5 WAS 8.0	B−1		
2.	07/03/2014	M−21	HARDNESS: 300−350HV WAS 280−330 HV	E−2,3		
1.	18/02/2011	M−15	DRG REVISED			

SIGN

DRN. TDG
CHD.
APPD.
DATE 28/05/2015 For Director
SEALED
DATE
SCALE 2:1
EST. MASS
DESIGN AUTHORITY
ARDE
PUNE 411021

MATERIAL:
STEEL TO IS: 5517−1993, Gd.40Ni6Cr4MO3 (En−24)

PROTECTIVE FINISH: PHOSPHATED TO SPECN. IS:3618−1966, CLASS 'B'

TITLE
LINK

DRG. No. 0204 (IC) 03 (SS) 02 (S) 18 (AA) 30 (A) 001 (C) 00DF (SST)

PART No. | DS CAT. No. | AHSP

Dy verified on 14/3/16

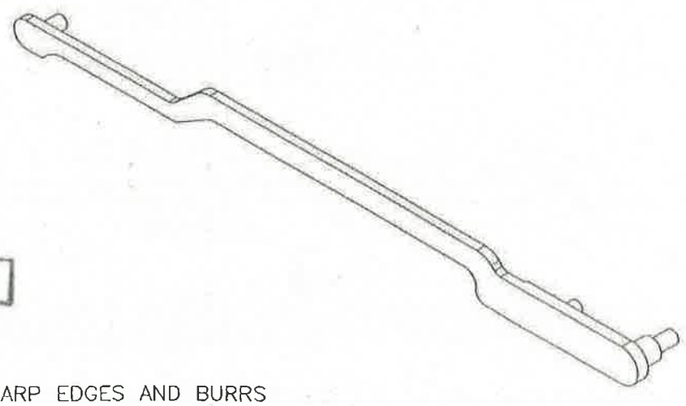

CONTROL COPY No.1

NOTES: 1) REMOVE ALL SHARP EDGES AND BURRS

2) HARDNESS : 300−350 HV

Received on 29/11/15

GEN.TOL. : ±0.2

DRAWING CONVENTION CONFIRM TO INDIAN STDS.
DIMN.IN mm UNLESS OTHERWISE STATED

DRG NO 0204 03 02 02 18 001 00DC F
IC SS S AA A C SST

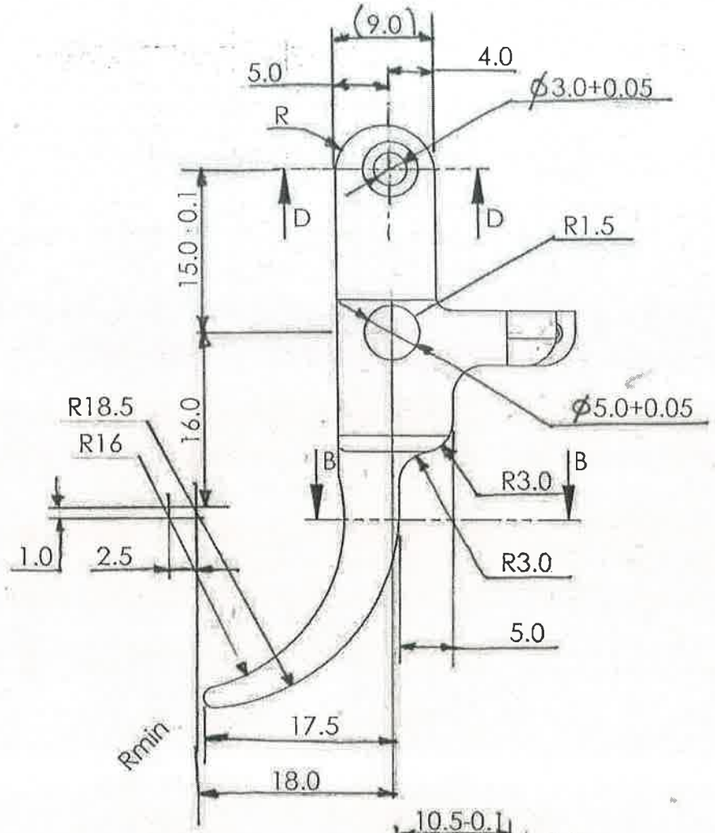

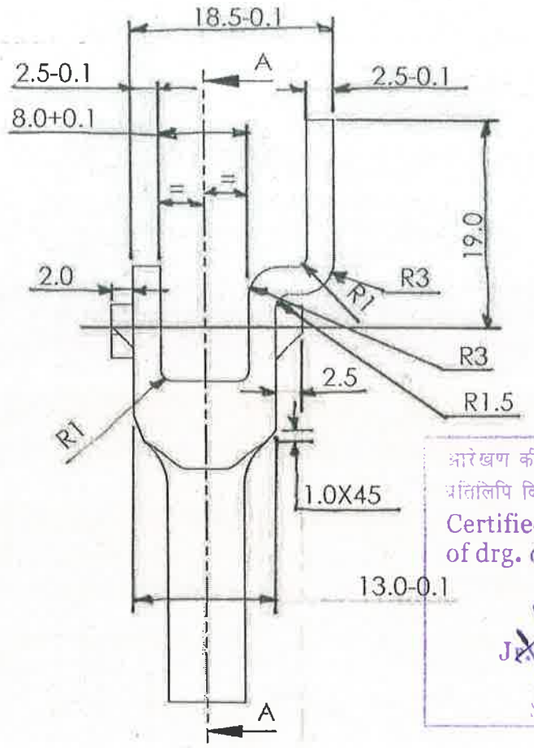

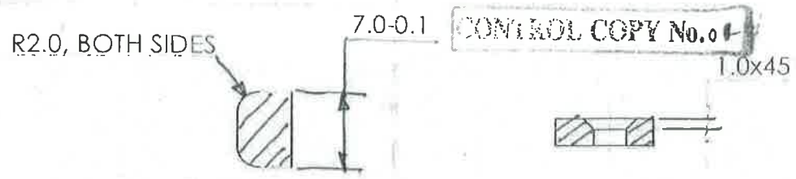

SECTION B-B

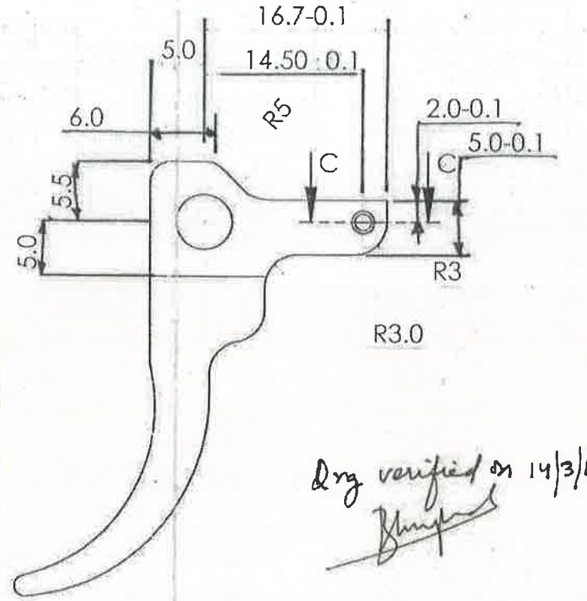

SECTION D-D

SECTION A-A

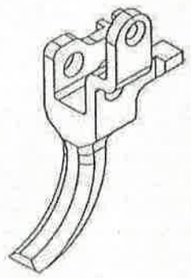

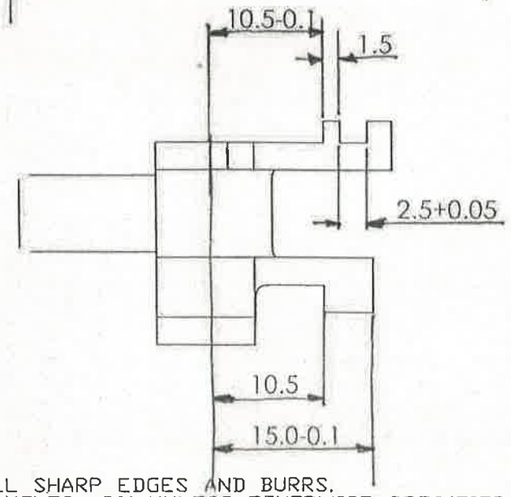

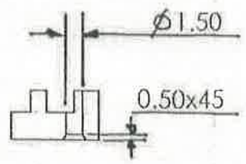

SECTION C-C

NOTES:
1) REMOVE ALL SHARP EDGES AND BURRS.
2) TOL FOR ANGLES 30' UNLESS OTHERWISE SPECIFIED.
3) CASE HARDENED TO 500-550 HV WITH CASE DEPTH 0.13 TO 0.26 .
4) ALT. MATERIAL: MIM 9310 (AISI 9310 Equivalent).
HARDNESS 500-600 HV CASE DEPTH 0.1-0.3 mm

CONTROL COPY No.0

आरेखण की सही प्रमाणित
प्रतिलिपि दिनाँक.....
Certified as correct copy
of drg. on 13/11/DD
Jt. Work Manager
STANDARD

Drg verified on 14/3/16

Received on 29/11/15

SR NO	DATE	AUTHORITY	BRIEF RECORD	ZONE	CD	GD
2	09/11/2015	M-29	DRG. REVISED	---		
1	14/07/2015	M-27	ALT. MATL. ADDED	---		

SIGN

DRN PRANAV CHD

APPD

DATE 09/11/2015 DIRECTOR

SEALED DATE

SCALE 2:1 EST MASS

DESIGN AUTHORITY ARDE

MATERIAL
STEEL TO IS: 4432-1988, Gd 13Ni13Cr3 (En-36B)

PROTECTIVE FINISH
PHOSPHATED TO SPECN. IS: 3618-1966, CLASS 'B'

TITLE

TRIGGER FRONT

DRG NO 0204 03 02 02 18 001 00DC F
IC SS S AA A C SST

PART NO DS CAT NO AHSP

CONTROL COPY No. 1

54

DRG. No.	IC	SS	S	AA	A	C	SST
	0 2 0 4	0 3	0 2	0 2	1 8	0 0 2	0 0 D B

GEN. TOL. FINE/MEDIUM/COARSE CLASS TO IS:2102

DRG. CONVENTIONS CONFIRM TO INDIAN STD. DIMN. IN mm UNLESS OTHERWISE STATED

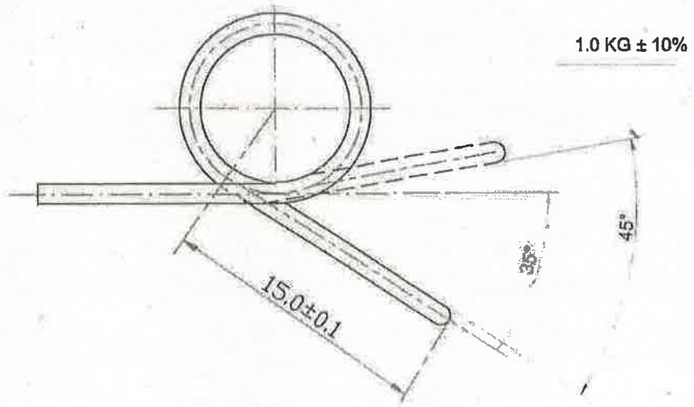

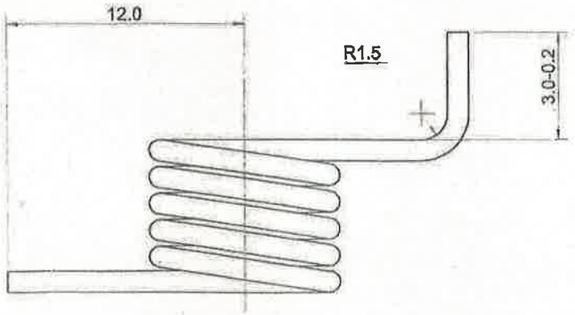

NOTES :

1) STRESS RELIEVED
2) WIRE DIA : 1.2
3) NO OFF COILS : 5
4) WOUND : L.H.
5) MEAN COIL DIA. : 7.0

Latest Drg as on 10/12/15

Dsg verified on 14/3/16

प्रतिलिपि की सही प्रमाणित
प्रतिलिपि दिनांक.....
Certified as correct copy
of drg. on 30/1/MMD
Jr. Works Manager
STANDARD

Sr. No.	DATE	AUTHORITY	BRIEF RECORD	ZONE	CD	GO
1	9/12/15	M-30	DIMN 12.0 WAS 15.0 DIMN 3.0 -0.2 WAS 4.5 -0.2	D-2,3 DE-4		

SIGN

DRN. S DAS | CHQ.

APPD. DATE 09/12/2013 For Director

SEALED DATE

SCALE 2:1 | EST. MASS

DESIGN AUTHORITY ARDE PUNE 411021

MATERIAL: STEEL TO IS: 4454 (Pt-1) 2001, DH

PROTECTIVE FINISH: PHOSPHATED TO SPECN. IS: 3618-1966,CLASS 'B'

TITLE: SPRING TRIGGER FRONT

DRG. No. 0 2 0 4 (IC) 0 3 (SS) 0 2 (S) 0 2 (AA) 1 8 (A) 0 0 2 (C) 0 0 D B (SST)

PART No. | DS CAT. No. | AHSP

(60)

DRG. No.	IC	SS	S	AA	A	C	SST
	0204	03	02	02	18	008	00DD

GEN. TOL. FINE/MEDIUM/COARSE CLASS TO IS:2102

DRG. CONVENTIONS CONFIRM TO INDIAN STD. DIMN. IN mm UNLESS OTHERWISE STATED

Certified true copy of drg. on ..... Jr. Work Manager STANDARD CUM.

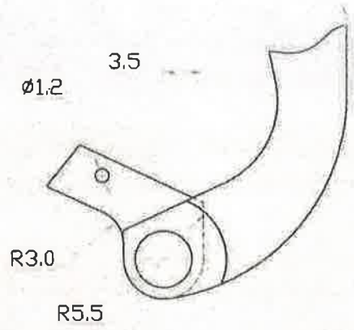

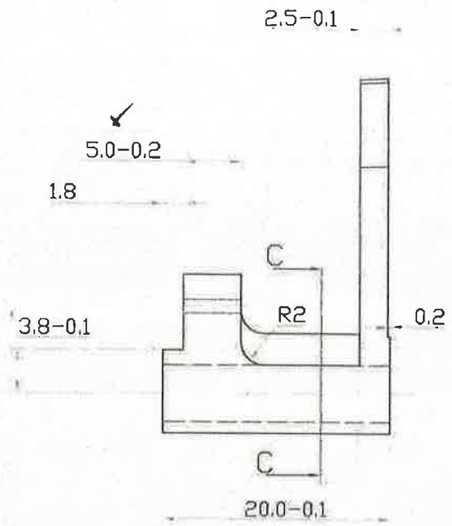

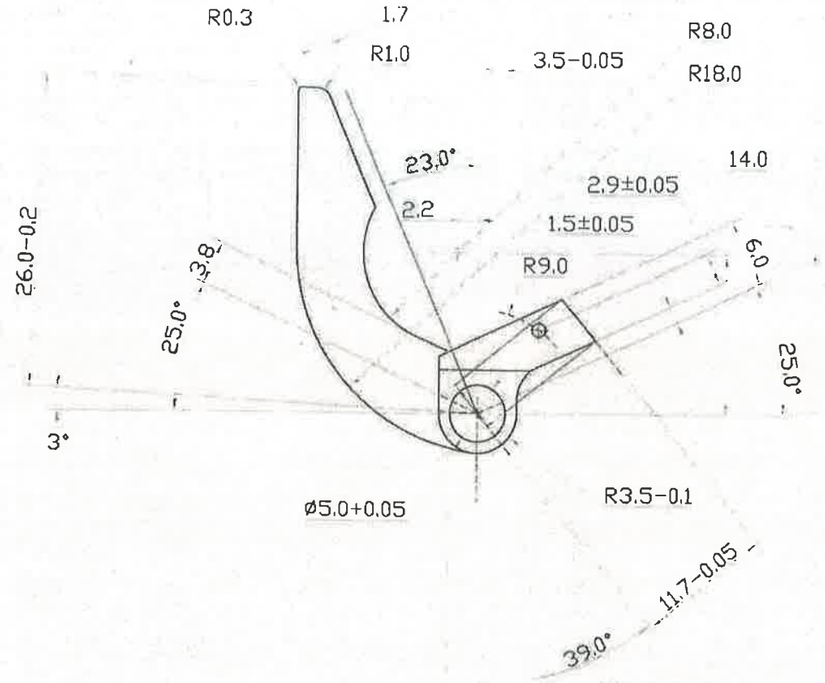

CONTROL COPY No. 2

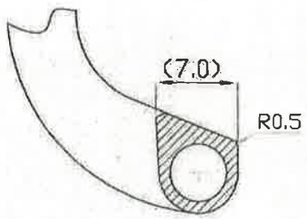

SECTION C-C

NOTES:

1) REMOVE ALL SHARP EDGES AND BURRS
2) HEAT TREATMENT : CASE HARDENED TO A DEPTH OF 0.13-0.26
   HARDENED & TEMPERED TO 500-550 H.V.
3) TOLERANCE FOR ANGLES ±30' UNLESS OTHERWISE STATED
4) ALT.MATERIAL : MIM 9310 (AISI 9310 EQIVALENT) HARDNESS-500-600 HV
   CASE DEPTH-0.1 TO 0.3mm

Received on 26/09/16

Sr. No.	DATE	AUTHORITY	BRIEF RECORD	ZONE	CD	GO
3	07/09/16	M-35	DIMN. 11.7-0.05 WAS 12.0-0.05	C,D-7		
2	18/11/15	M-29	ALT.MATERIAL MODIFIED	F-1,2		
1	14/7/15	M-27	ALT.MATERIAL ADDED	F-1,2		

SIGN

DRN. PRANAV CHD.

APPD. DATE 07/09/2016 For Director

SEALED DATE

SCALE 2:1 EST. MASS

DESIGN AUTHORITY ARDE PUNE 411021

MATERIAL: STEEL TO IS: 4432 1988, Gr 13Ni13Cr3 (En-36B)

PROTECTIVE FINISH: PHOSPHATED TO SPECN. IS:3618-1966, CLASS 'B'

TITLE

SEAR SAFETY

DRG. No. 0204 (IC) 03 (SS) 02 (S) 02 (AA) 18 (A) 008 (C) 00DD (SST)

PART No. DS CAT. No. AHSP

DRG. No.	IC	SS	S	AA	A	C	SST
	0204	03	02	02	18	009	00DA

GEN. TOL. FINE/MEDIUM/COARSE CLASS TO IS:2102

DRG. CONVENTIONS CONFIRM TO INDIAN STD. DIMN. IN mm UNLESS OTHERWISE STATED

CONTROL COPY No. 1

MASTER COPY

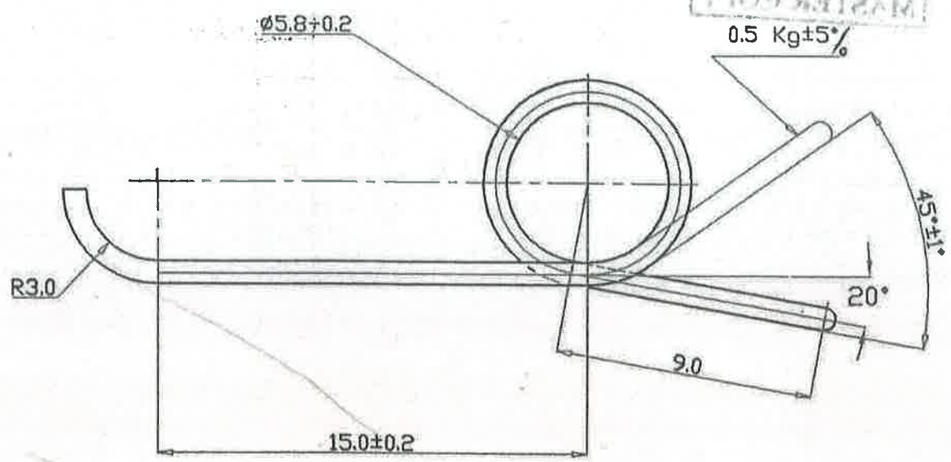

NOTES :

1) STRESS RELIEVED
2) WIRE DIA : 1.0
3) NO OFF COILS : 7
4) WOUND : L.H.

Drg verified on 14/3/16

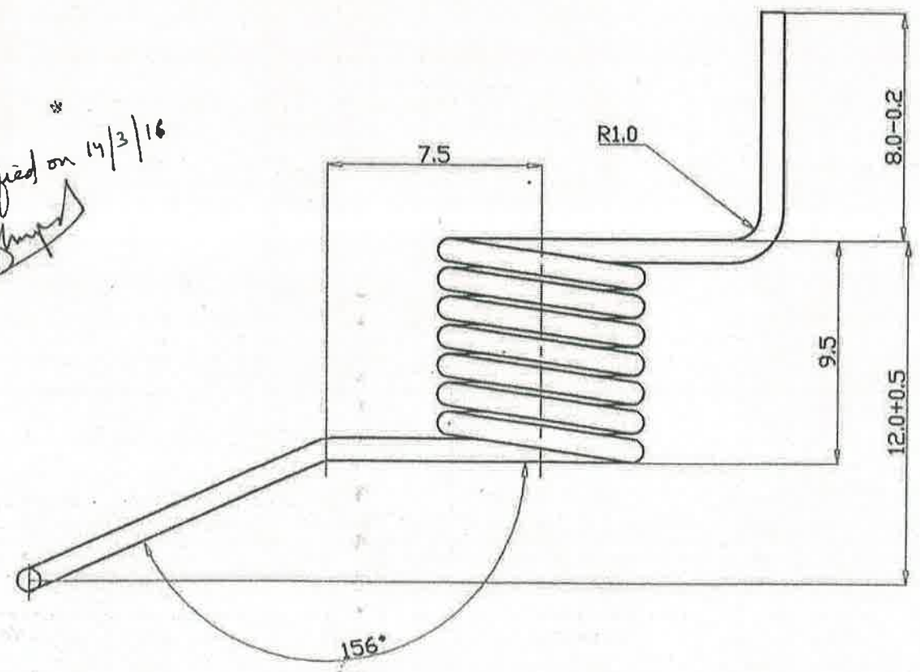

Received on 29/11/15

Sr. No.	DATE	AUTHORITY	BRIEF RECORD	ZONE	CD SIGN	GO SIGN

DRN. RGN CHD.

APPD. DATE: 08/11/2010 For Director

SEALED DATE

SCALE 2:1 EST. MASS

DESIGN AUTHORITY ARDE PUNE 411021

MATERIAL: STEEL TO SPECN. IS:4454 (Pt-1)-2001, DH

PROTECTIVE FINISH: PHOSPHATED TO SPECN. IS:3618-1966, CLASS 'B'

TITLE

SPRING SEAR SAFETY

DRG. No. 0204 (IC) 03 (SS) 02 (S) 02 (AA) 18 (A) 009 (C) 00DA (SST)

PART No. DS CAT. No. AHSP

निरीक्षण की सही प्रमाणित प्रतिलिपि दिनांक 1.11.MMD
Certified a correct copy of drg. on
Jr. Manager (Standards)
13/11/18

DRG. No.	IC	SS	S	AA	A	C	SST
	0204	03	02	02	18	011	00DD

GEN. TOL. FINE/MEDIUM/COARSE CLASS TO IS:2102

DRG. CONVENTIONS CONFIRM TO INDIAN STD. DIMN. IN mm UNLESS OTHERWISE STATED

CONTROL COPY No. 1

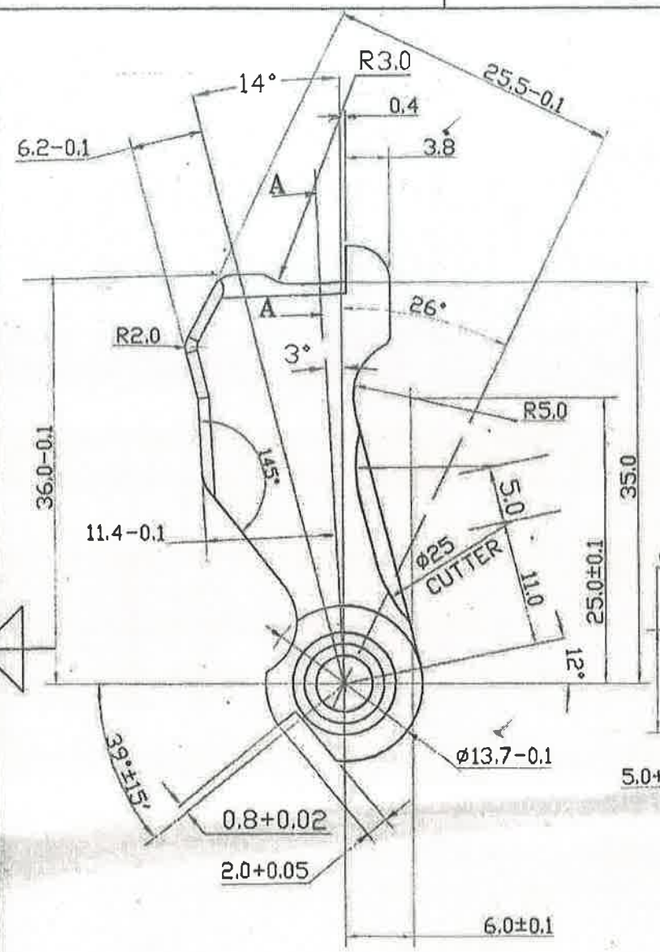

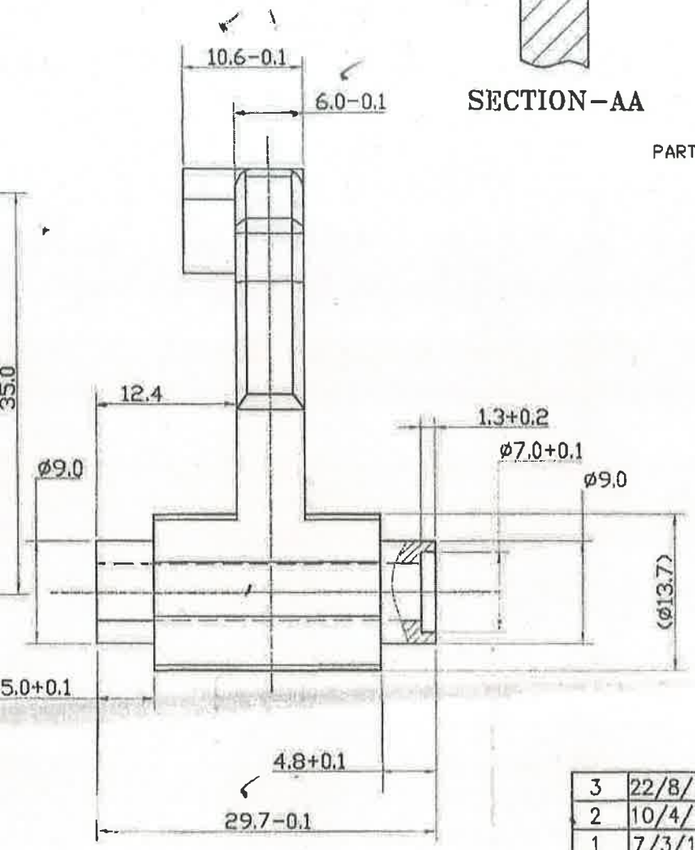

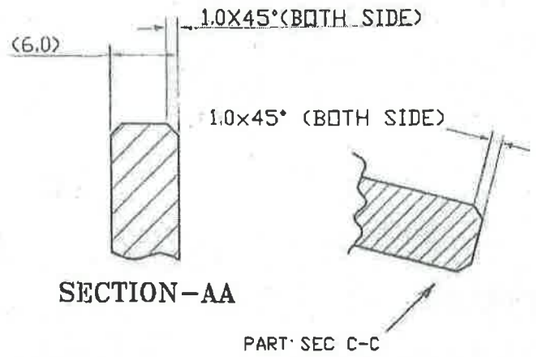

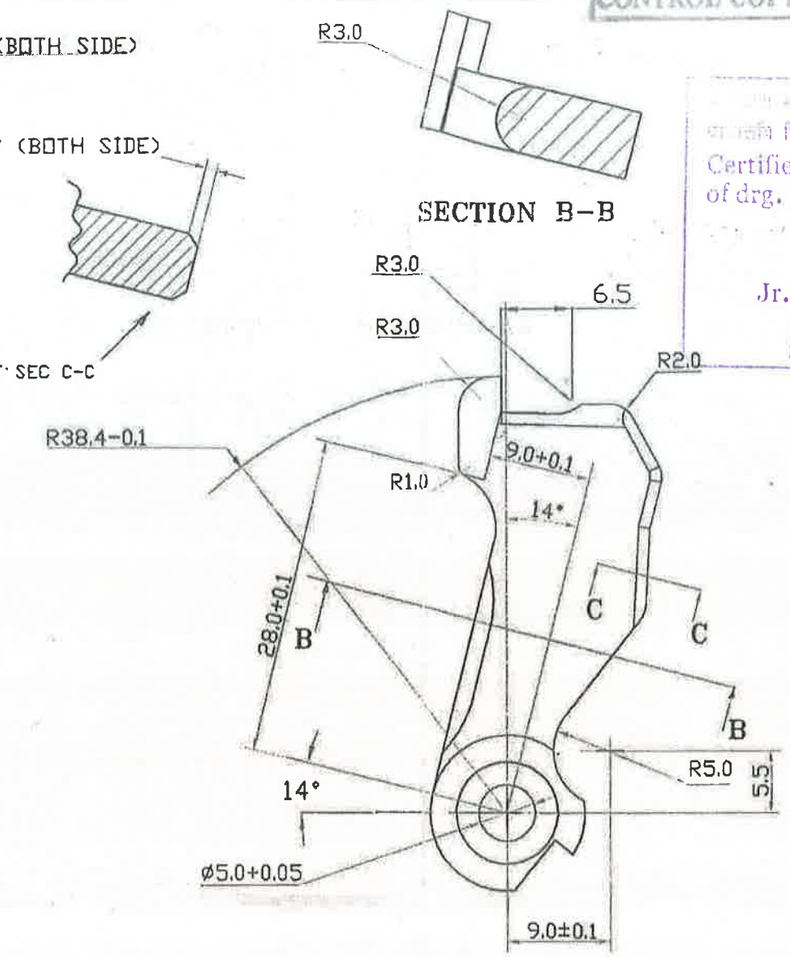

Dry verified on 14/3/16

NOTE:- 1) REMOVE ALL SHARP EDGES AND BURRS
2) TOLS. FOR ANGLES ±30' UNLESS OTHERWISE STATED
3) HEAT TREATMENT : CASE HARDENED TO A DEPTH OF 0.13 TO 0.26
4) HARDNESS: 600-650 HV

Received on 25/11/15

20.7.2015

Sr. No.	DATE	AUTHORITY	BRIEF RECORD	ZONE	CD	GO
3	22/8/14	M-24	DIMN.0.8+0.02 & 2.0+0.05 ADDED	D-2		
2	10/4/14	M-22	DRG.REVISED			
1	7/3/14	M-21	DRG.REVISED			

SIGN

DRN. SSD
CHD.
APPD. DATE 22/08/2014 for Director
SEALED DATE
SCALE 2:1
EST. MASS
DESIGN AUTHORITY ARDE PUNE 411021

MATERIAL: STEEL TO IS;4432-1988,Gd13Ni13Cr3 (En-36B)

PROTECTIVE FINISH: PHOSPHATED TO SPECN.IS:3618-1966, CLASS 'B'

TITLE: HAMMER

DRG. No. 0204 (IC) 03 (SS) 02 (S) 02 (AA) 18 (A) 011 (C) 00DD (SST)

PART No. | DS CAT. No. | AHSP

Certified as true copy of drg. on ..... Jr. Works Manager STANDARD CELL

DRG. No.	IC	SS	S	AA	A	C	SST
	0204	03	02	02	18	012	00DA

GEN. TOL. FINE/MEDIUM/COARSE
CLASS TO IS:2102

DRG. CONVENTIONS CONFIRM TO INDIAN STD.
DIMN. IN mm UNLESS OTHERWISE STATED

CONTROL COPY No. 1

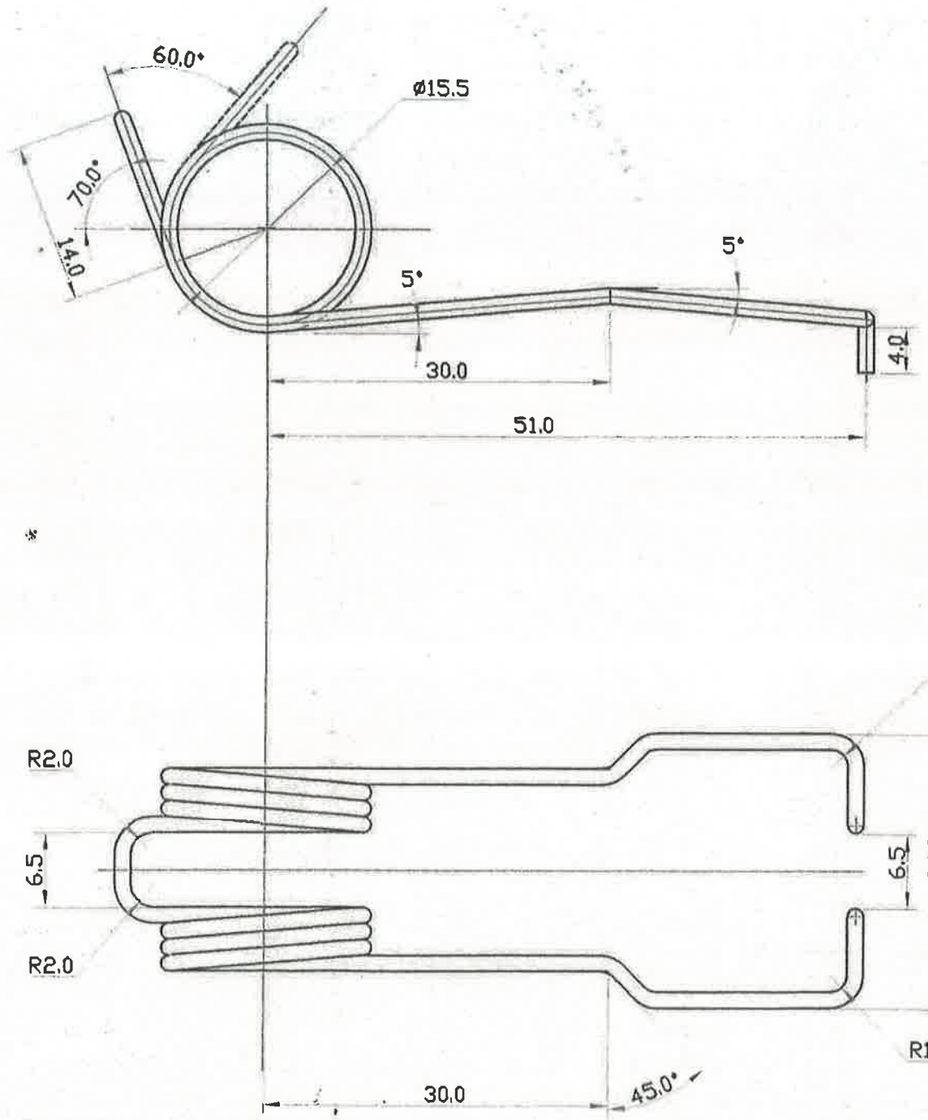

NOTES:

WIRE DIA : 1.25
MEAN COIL DIAMMETER : 16.9
No. OF EFFECTIVE COILS : 3+3
WOUND : AS SHOWN
LOAD TO BE ENSURED AS FOLLOWS:
DEFLECTION 60° : 2.3kg. ± 5%
DEFLECTION 135° : 5.2kg. ± 5%
STRESS RELIEVED
TOLERANCE FOR UNTOLERANCED DIMNS ±0.2
TOLERANCE FOR ANGLES ±1°

Dy verified on 14/3/16

मानक की सही प्रमाणित प्रतिलिपि दिनांक.....
Certified as correct copy of drg. on.....
कार्यप्रबंधक
Works Manager
मानक प्रकोष्ठ
STANDARD CELL

Received on 29/11/15

Sr. No.	DATE	AUTHORITY	BRIEF RECORD	ZONE	CD	GO
					SIGN	

DRN. RGN
CHD.
APPD.
DATE : 08/1/2010 For Director
SEALED DATE
SCALE 2:1
EST. MASS
DESIGN AUTHORITY
ARDE
PUNE 411021

MATERIAL:
STEEL TO SPECN. IS:4454 (Pt-1)-2001, DH

PROTECTIVE FINISH:
PHOSPHATED TO SPECN. IS:3618-1966, CLASS 'B'

TITLE
SPRING HAMMER

DRG. No. 0204 (IC) 03 (SS) 02 (S) 02 (AA) 18 (A) 012 (C) 00DA (SST)

PART No.
DS CAT. No.
AHSP

DRG NO	IC	SS	S	AA	A	C	SST
	0204	03	02	02	18	013	00DC

GEN.TOL.MEDIUM/COARSE/FINE CLASS TO IS :2102

DRAWING CONVENTION CONFIRM TO INDIAN STDS. DIMN.IN mm UNLESS OTHERWISE STATED

CONTROL COPY No. 01

NOTES:

1) REMOVE ALL SHARP EDGES AND BURRS
2) TOLLERANCE FOR ANGLES ±30', UNLESS OTHERWISE STATED
3) HEAT TREATMENT : CASE HARDENED TO A DEPTH OF 0.13 TO 0.26
4) HARDNESS :500 TO 550 HV
5) ALT. MATERIAL: MIM 9310 (AISI 9310 Equivalent)
   HARDNESS: 500–600 HV, Case Depth: 0.1 to 0.3mm.

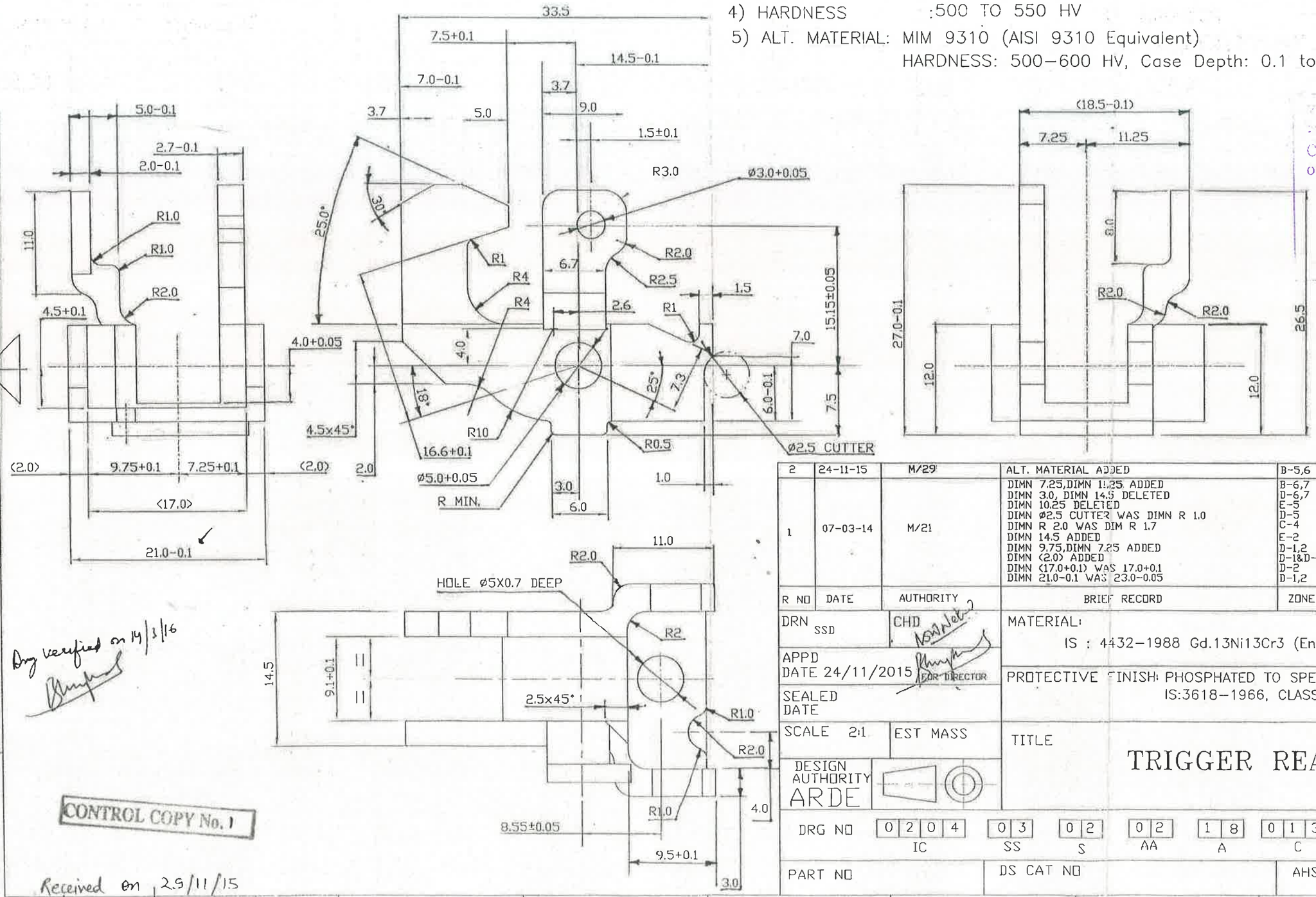

R NO	DATE	AUTHORITY	BRIEF RECORD	ZONE	CD	GD
2	24-11-15	M/29	ALT. MATERIAL ADDED	B-5,6		
1	07-03-14	M/21	DIMN 7.25,DIMN 11.25 ADDED DIMN 3.0, DIMN 14.5 DELETED DIMN 10.25 DELETED DIMN Ø2.5 CUTTER WAS DIMN R 1.0 DIMN R 2.0 WAS DIM R 1.7 DIMN 14.5 ADDED DIMN 9.75,DIMN 7.25 ADDED DIMN (2.0) ADDED DIMN (17.0+0.1) WAS 17.0+0.1 DIMN 21.0–0.1 WAS 23.0–0.05	B-6,7 D-6,7 E-5 D-5 C-4 E-2 D-1,2 D-1&D-2 D-2 D-1,2		

SIGN

DRN SSD

CHD

APPD DATE 24/11/2015 FOR DIRECTOR

SEALED DATE

SCALE 2:1

EST MASS

DESIGN AUTHORITY ARDE

MATERIAL: IS : 4432–1988 Gd.13Ni13Cr3 (En–36B)

PROTECTIVE FINISH: PHOSPHATED TO SPECN. IS:3618–1966, CLASS 'B'

TITLE

TRIGGER REAR

DRG NO	IC	SS	S	AA	A	C	SST
	0204	03	02	02	18	013	00DC

PART NO

DS CAT NO

AHSP

Dry verified on 14/3/16

CONTROL COPY No. 1

Received on 29/11/15

Certified as correct copy of drg. on 13/8/18

Jr. Workshop Manager

DRG NO	IC	SS	S	AA	A	C	SST
	0204	03	02	02	18	014	00DE

GEN.TOL.MEDIUM/COARSE/FINE CLASS TO IS :2102

DRAWING CONVENTION CONFIRM TO INDIAN STDS. DIMN.IN mm UNLESS OTHERWISE STATED

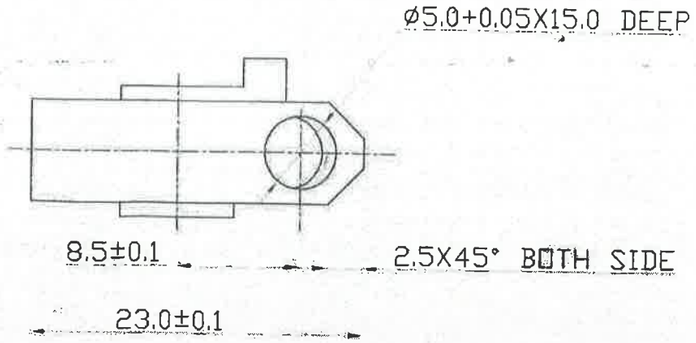

NOTES :-

1) REMOVE ALL SHARP EDGES AND BURRS
2) TOLERANCE FOR ANGLES ±30', UNLESS OTHERWISE STATED
3) HEAT TREATMENT : CASE HARDENED TO A DEPTH OF 0.10 TO 0.30
4) HARDNESS : 500 TO 600 HV,
5) ALT.MATERIAL : MIM 9310 (EQUIVALENT INTERNATIONAL STANDARD AISI 9310)

HARDNESS : 500-600 HV
CASE DEPTH : 0.1-0.3 MM

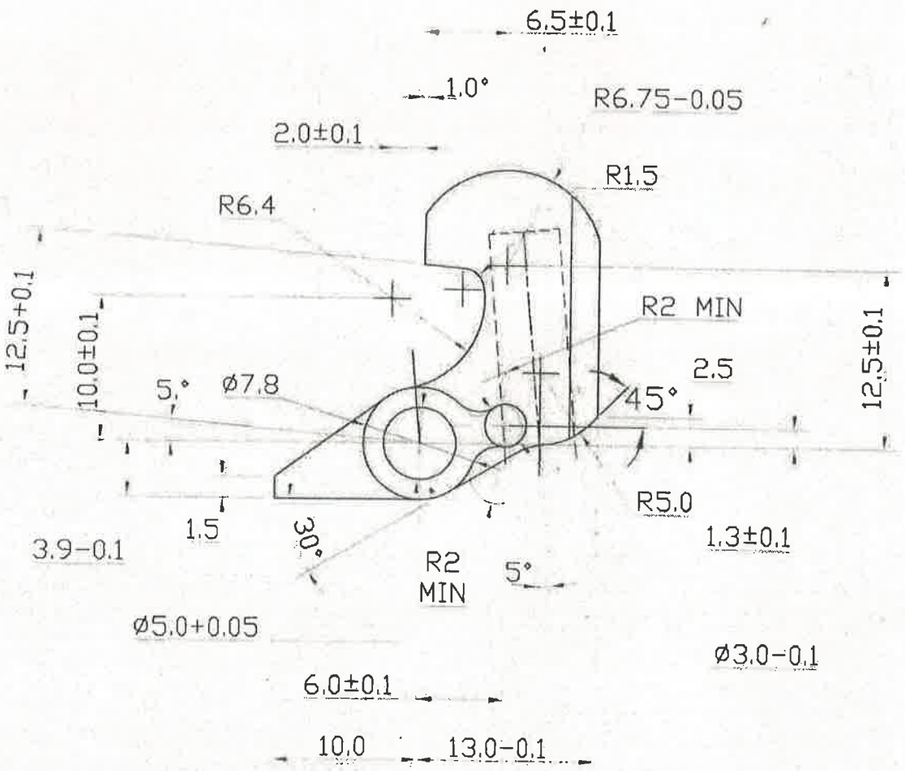

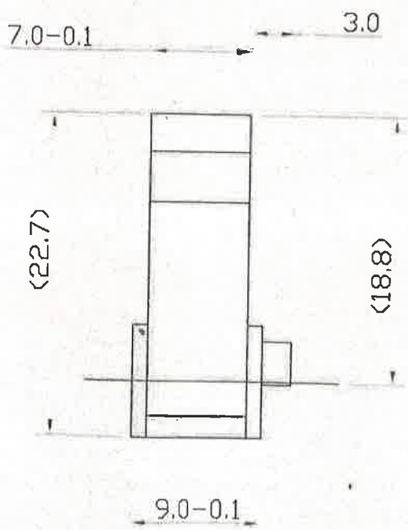

Certified as correct copy of drg. on.....
Jr. Works Manager
STANDARD

R NO	DATE	AUTHORITY	BRIEF RECORD	ZONE	CD	GD
4	12/8/16	M-35	DIMN. 6.5±0.1 ADDED	C-3		
3	23/11/15	M-29	DRG. REVISED	-----		
2	3/11/15	M-29	ALT. MATERIAL & HARDNESS REVISED	B-5,6		
1	14/8/15	M-28	ALT. MATERIAL ADDED	B-5,6		

SIGN

DRN SSD
CHD
APPD DATE 12/08/2016 FOR DIRECTOR
SEALED DATE
SCALE 2:1
EST MASS
DESIGN AUTHORITY ARDE

MATERIAL: STEEL TO IS:4432 1988, Gr 13Ni13Cr3 (En-36B)

PROTECTIVE FINISH: PHOSPHATED TO SPECN. IS:3618-1966, CLASS 'B'

TITLE **SEAR**

DRG NO 0204 (IC) 03 (SS) 02 (S) 02 (AA) 18 (A) 014 (C) 00DE (SST)

PART NO | DS CAT NO | AHSP

69

DRG.No. 0204 03 02 02 18 018 00DE

GEN. TOL. FINE/MEDIUM/COARSE
CLASS TO IS: 2102

DRG. CONVENTIONS CONFIRM TO INDIAN STD.
DIMN. IN mm UNLESS OTHERWISE STATED

NOTES:-

1) REMOVE ALL SHARP EDGES AND BURRS.
2) HARDNESS: 300-350 HV
3) ALT. MATERIAL: MIM S7 (AISI S7 EQUIVALENT HARDNESS 500-600 HV

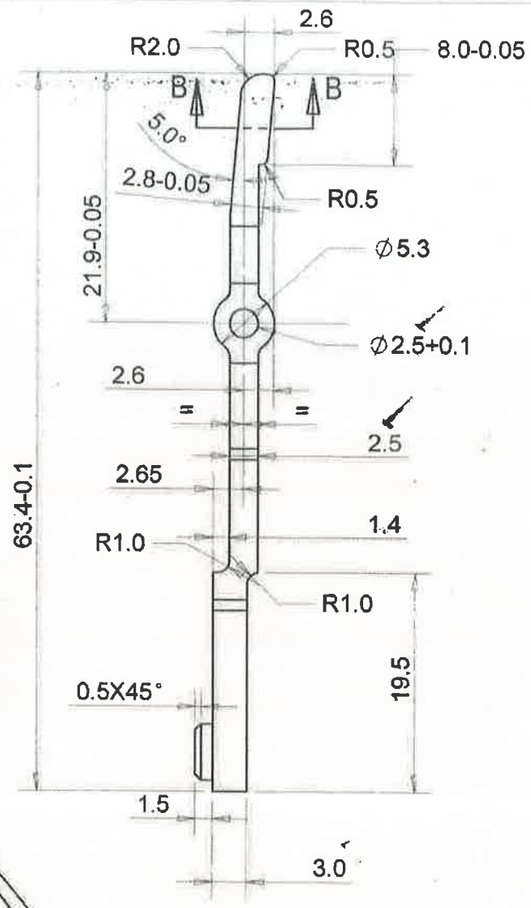

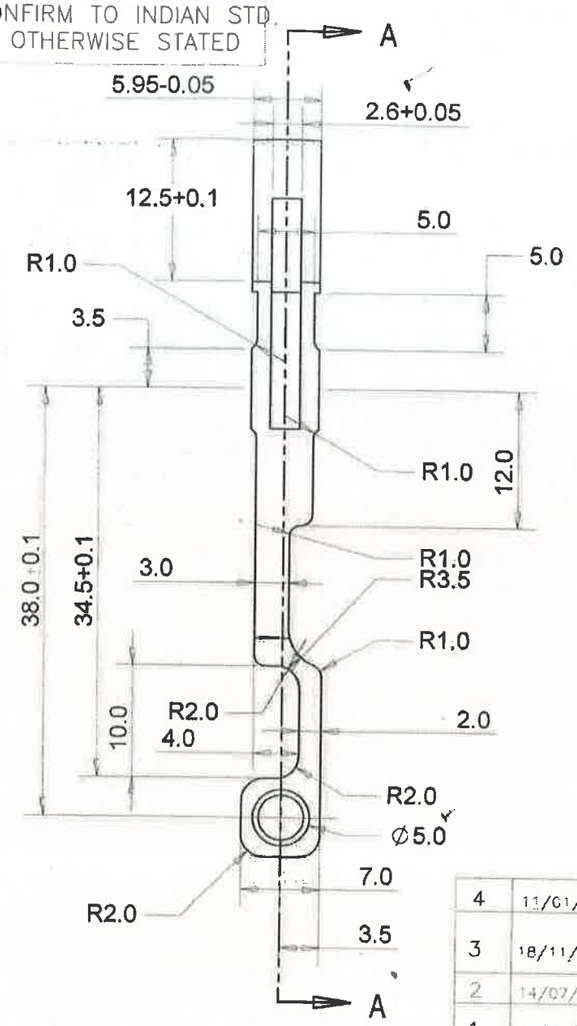

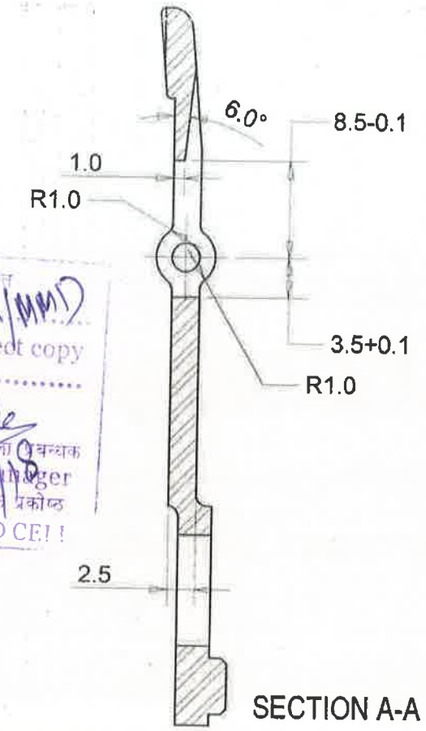

SECTION A-A

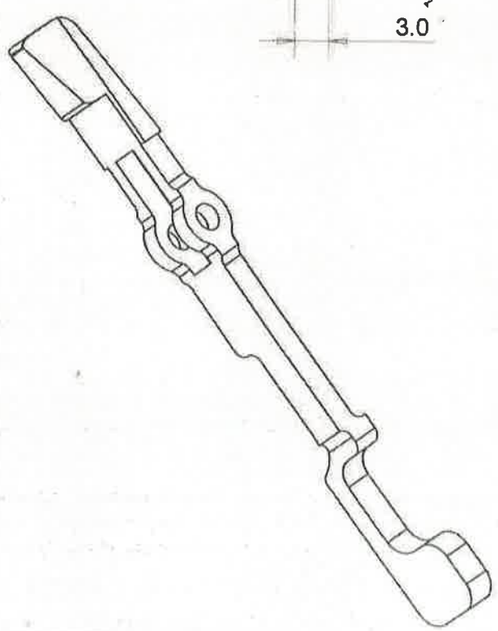

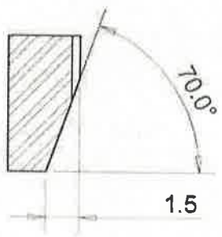

SECTION B-B

अंकेक्षण की सही प्रमाणित प्रतिलिपि दिनांक 7/11/2017
Certified as correct copy of drg. on.....
Jr. Works Manager
STANDARD CELL

Sr. No.	DATE	AUTHORITY	BRIEF RECORD	ZONE	CD	GO
4	11/01/2017	M-37	DIMN 2.8-0.05 ADDED	B-1,2		
3	18/11/2015	M-29	DIMN 8.0-0.1 WAS 9.2-0.1 DIMN 21.9-0.05 WAS 25.5-0.05 DIMN 63.4-0.1 WAS 67.0-0.1 VIEW AMENDED ACCORDINGLY ALT. MATERIAL MODIFIED	B-5 C-3 D-3		
2	14/07/2015	M-27	ALT. MATERIAL ADDED	A-10,11		
1	02/08/2011	M-18	DIMN 18.5 DELETED DIMN 3.7 DIMN R0.5 DIMN 3.5, DIMN 4.5 DELETED VIEW AMENDED ACCORDINGLY	B-2 B-3		

SIGN

DRN. SD
CHD.
APPD.
DATE 11/01/2017 Director
SEALED
DATE

MATERIAL :- STEEL TO IS:5517-1993, Gd-40C8 (En-8)

PROTECTIVE FINISH :-PHOSPHATED TO SPECN. IS:3618-1966, CLASS 'B'

SCALE:- NTS
EST. MASS

TITLE :-

DESIGN AUTHORITY
ARDE
PUNE 411021

LEVER CATCH MAGAZINE

DRG.No. 0204 03 02 02 18 018 00DE
IC SS S AA A C SST

PART No.
DS CAT. No.
AHSP

DRG.No.	IC	SS	S	AA	A	C	SST
	0204	03	02	18	29	003	00DB

GEN TOL FINE/MEDIUM/COARSE CLASS TO IS:2102

DRG CONVENTIONS CONFIRM TO INDIAN STD DIMN IN mm UNLESS OTHERWISE STATED

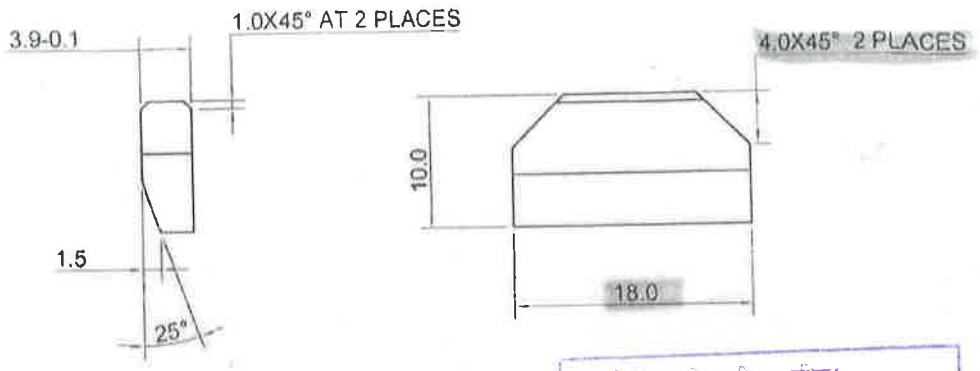

NOTES:

1) REMOVE ALL SHARP EDGES AND BURRS

2) HARDNESS : 250 – 300 HV

आरेखण की सही प्रमाणित प्रतिलिपि दिनाँक.....
Certified as correct copy of drg. on.....
Jr. Work Manager

S No	DATE	AUTHORITY	BRIEF RECORD	ZONE	CD	GO
1.	05/06/17	M-38	DIMN. 1.0x45° AT 2 PLACES ADDED DIMN. 4.0x45° AT 2 PLACES WAS 1.0x45° AT 4 PLACES DIMN. 18.0 WAS 12.0	B-2,3 B-4 C-3		

SIGN

DRN PRANAV | CHD

APPD DATE 05/06/2017 For Director

SEALED DATE

SCALE 2:1 | EST MASS

DESIGN AUTHORITY
ARDE
PUNE 411021

MATERIAL:
STEEL TO IS: 5517-1993, Gd 40C8 (En-8)

PROTECTIVE FINISH: PHOSPHATED TO SPECN. IS:3618-1966, CLASS 'B'

TITLE

GUIDE PIECE MAGAZINE

DRG.No.	IC	SS	S	AA	A	C	SST
	0204	03	02	18	29	003	00DB

PART No | DS CAT No | AHSP

05/06/2017

DRG.No.	IC	SS	S	AA	A	C	SST
	0204	03	02	18	29	004	00DF

GEN TOL FINE/MEDIUM/COARSE CLASS TO IS:2102

DRG CONVENTIONS CONFIRM TO INDIAN STD DIMN IN mm UNLESS OTHERWISE STATED

Received on 29/11/15

CONTROL COPY No. 00

आरेखण की सही प्रमाणित प्रतिलिपि दिनांक.....
Certified as correct copy of drg. on.....
कार्यालय प्रबन्धक
Jr. Works Manager
मानक प्रकोष्ठ
STANDARD CELL

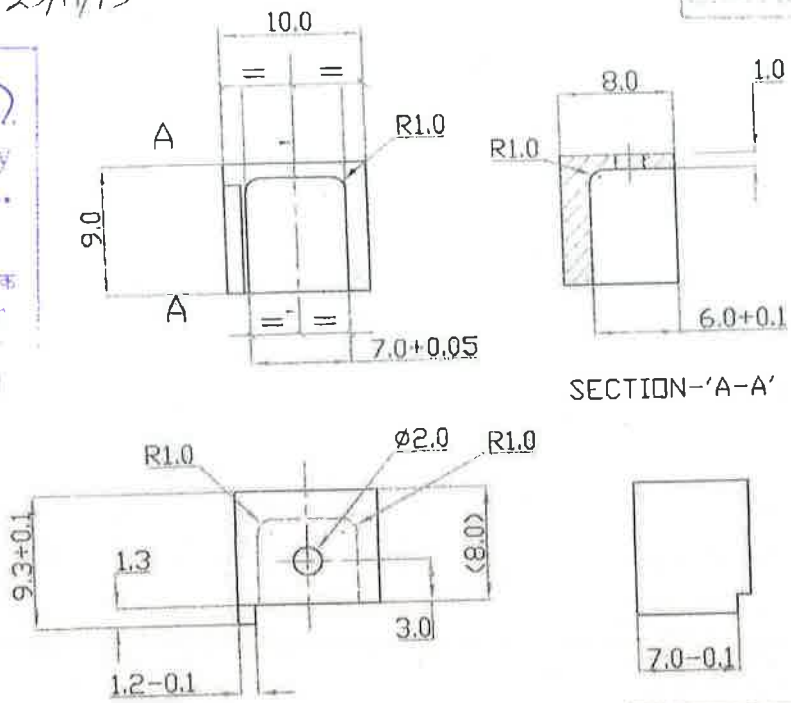

Drg verified on 17/3/16

CONTROL COPY No. 1

NOTES: 1) REMOVE ALL SHARP EDGES AND BURRS
2) HEAT TREATMENT: CASE HARDENED TO A DEPTH OF 0.13 TO 0.26
3) HARDNESS: 500–550 HV
4) ALT.MATERIAL : MIM 9310 (AISI 9310 EQUIVALENT)
HARDNESS:500–600HV, CASE DEPTH–0.1 TO 0.3mm

S No	DATE	AUTHORITY	BRIEF RECORD	ZONE	CD	GO
5	18/11/15	M/29	ALT.MATERIAL MODIFED	D–1,2		
4	17/8/15	M/28	DIMN.7.0+0.05 WAS 6.5+0.1 R1.0 & R0.5 ADDED	B–2 B,C–3		
3	14/7/15	M/27	ALT.MATERIAL ADDED	D–1,2		
2	22/5/15	M/26	VIEW CORRECTED	C–3		
1	10/4/14	M–22	DIMN. 6.5+0.1 WAS 7.0+0.1	B–1		

SIGN

DRN RGN CHD

APPD DATE 18/11/2015 For Director

SEALED DATE

SCALE 2:1 EST MASS

DESIGN AUTHORITY
ARDE
PUNE 411021

MATERIAL:
STEEL TO IS: 4432–1988, Gd 13Ni13Cr3 (En–36B)

PROTECTIVE FINISH: PHOSPHATED TO SPECN. IS:3618–1966, CLASS 'B'

TITLE

HOUSING PLUNGER

DRG.No.	IC	SS	S	AA	A	C	SST
	0204	03	02	18	29	004	00DF

PART No | DS CAT No | AHSP

55

DRG.No.	IC	SS	S	AA	A	C	SST
	0204	03	02	02	18	003	00DA

GEN TOL FINE/MEDIUM/COARSE CLASS TO IS:2102

DRG CONVENTIONS CONFIRM TO INDIAN STD DIMN IN mm UNLESS OTHERWISE STATED

CONTROL COPY NO. 1

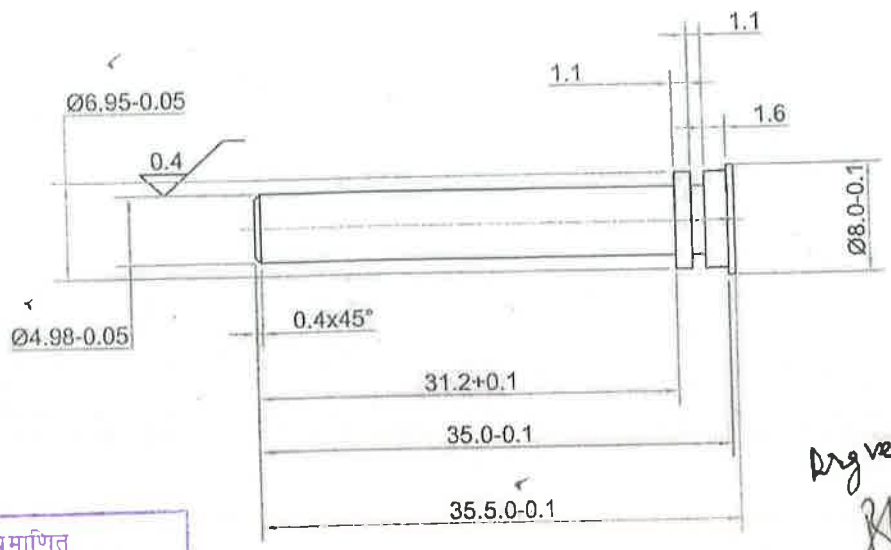

Drg verified on 14/3/16

आरेखण की सही प्रमाणित प्रतिलिपि दिनाँक ..... Certified as correct copy of drg. on ..... Jr. Works Manager STANDARD OFFICE

NOTES :
1) REMOVE ALL SHARP EDGES AND BURRS
2) HARDNESS : 500–550 HV
3) HEAT TREATMENT : CASE HARDENED TO A DEPTH OF 0.13 TO 0.26

Received on 29/11/15

S No	DATE	AUTHORITY	BRIEF RECORD	ZONE	CD	GO
					SIGN	

DRN RGN | CHD

APPD DATE 07/03/2014 For Director

SEALED DATE

SCALE 2:1 | EST MASS

DESIGN AUTHORITY ARDE PUNE 411021

MATERIAL: STEEL TO IS: 4432 1988, Gr 13Ni13Cr3 (En 36–B)

PROTECTIVE FINISH: PHOSPHATED TO SPECN IS: 3618–1966, CLASS 'B'

TITLE

PIN TRIGGER, HAMMER AND SEAR SAFETY

DRG.No. 0204 (IC) 03 (SS) 02 (S) 02 (AA) 18 (A) 003 (C) 00DA (SST)

PART No | DS CAT No | AHSP

56

DRG.No. 0204 03 02 02 18 004 00DA
IC SS S AA A C SST

GEN TOL FINE/MEDIUM/COARSE CLASS TO IS:2102

DRG CONVENTIONS CONFIRM TO INDIAN STD DIMN IN mm UNLESS OTHERWISE STATED

CONTROL COPY No. 1

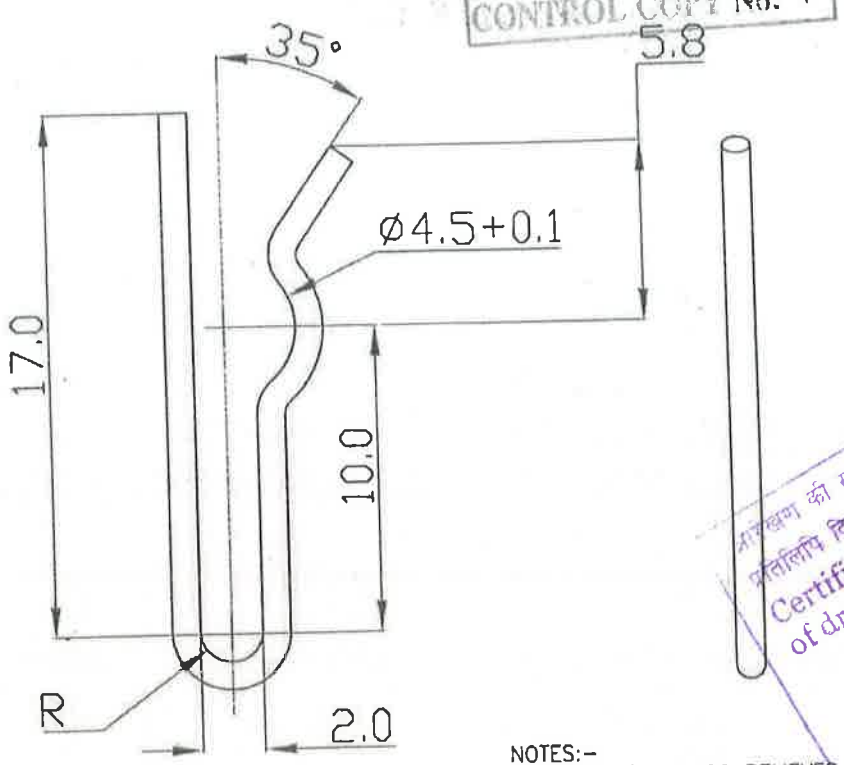

NOTES:-
1) STRESS RELIEVED
2) WIRE DIA : 0.9

Dy verified on 14/3/16

Received on 29/11/15

प्रमाणित प्रतिलिपि दिनांक 17/11/2016
Certified as correct copy of drg. on 13/2/18

S No	DATE	AUTHORITY	BRIEF RECORD	ZONE	CD	GO
					SIGN	

DRN RGN | CHD | APPD DATE 10-1-12 For Director | SEALED DATE

MATERIAL: STEEL TO IS:4454 (Pt-1) 2001, DH

PROTECTIVE FINISH: PHOSPHATED TO SPECN. IS: 3618-1966 , CLASS 'B'

SCALE 5:1 | FST MASS

TITLE
SPRING,LOCKING PIN TRIGGER FRONT & PIN AUTO SEAR

DESIGN AUTHORITY
ARDE
PUNE 411021

DRG.No. 0204 (IC) 03 (SS) 02 (S) 02 (AA) 18 (A) 004 (C) 00DA (SST)

PART No | DS CAT .No | AHSP

57

DRG.No.	IC	SS	S	AA	A	C	SST
	0204	03	02	02	18	005	00DA

GEN TOL FINE/MEDIUM/COARSE CLASS TO IS:2102

DRG CONVENTIONS CONFIRM TO INDIAN STD DIMN IN mm UNLESS OTHERWISE STATED

Received on 29/11/15

CONTROL COPY No. 1

5.81kg±10%

Dy verified on 14/3/16

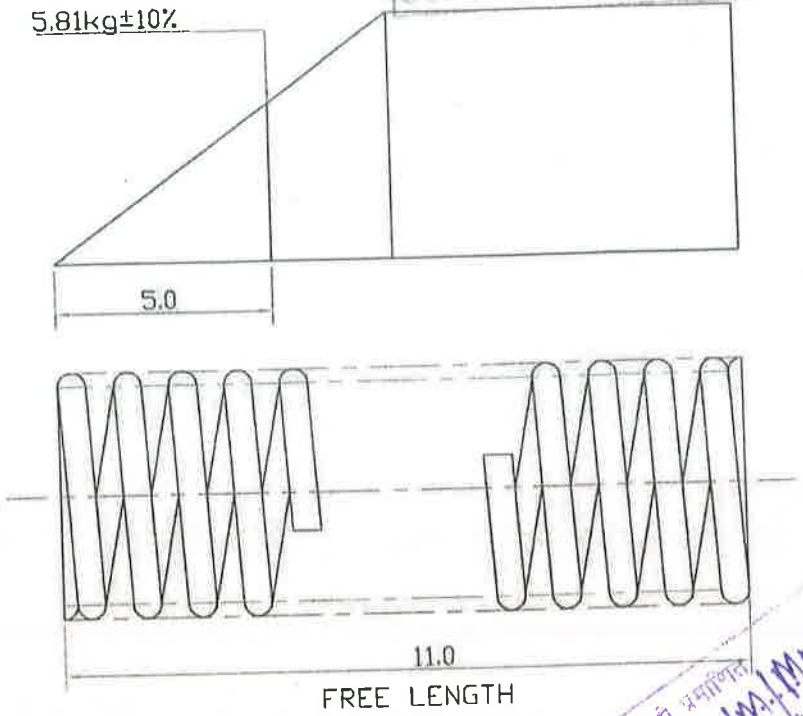

NOTES :

1) STRESS RELIEVED
2) WIRE DIA : 0.7
3) MEAN DIA : 3.0
4) No.OF EFFECTIVE COILS : 5
5) WOUND : L H OR R H

CRAMP TEST:-SPRING TO BE TESTED BEFORE GAUGING BY COMPRESSION TO A LENGTH OF 6mm FOR A PERIOD OF 12, HOURS AFTER WHICH IT MUST CONFORM TO FREE LENGTH.

ONE COIL OF EACH END TO BE CLOSED IN AND GROUND SQUARE TO THE AXIS OF THE COIL, LEAVING 3/4 OF COIL AT EACH END. NON EFFECTIVE

प्रमाणित सही प्रमाणित
Certified to be a correct copy
of the original
Work Manager
TWM/MMD
13/3/18

S No	DATE	AUTHORITY	BRIEF RECORD	ZONE	CD SIGN	GO SIGN

DRN KSD | CHD

APPD DATE 08/11/2010 For Director

SEALED DATE

SCALE 5:1 | EST MASS

DESIGN AUTHORITY ARDE PUNE 411021

MATERIAL: STEEL TO IS:4454 (Pt-1) 2001, DH

PROTECTIVE FINISH: PHOSPHATED TO SPECN. IS: 3618-1966, CLASS 'B'

TITLE

SPRING PLUNGER WHEEL LOCK

DRG.No. 0204 (IC) 03 (SS) 02 (S) 02 (AA) 18 (A) 005 (C) 00DA (SST)

PART No | DS CAT No | AHSP

DRG.No.	IC	SS	S	AA	A	C	SST
	0204	03	02	02	18	006	00DF

GEN TOL FINE/MEDIUM/COARSE CLASS TO IS:2102

DRG CONVENTIONS CONFIRM TO INDIAN STD DIMN IN mm UNLESS OTHERWISE STATED

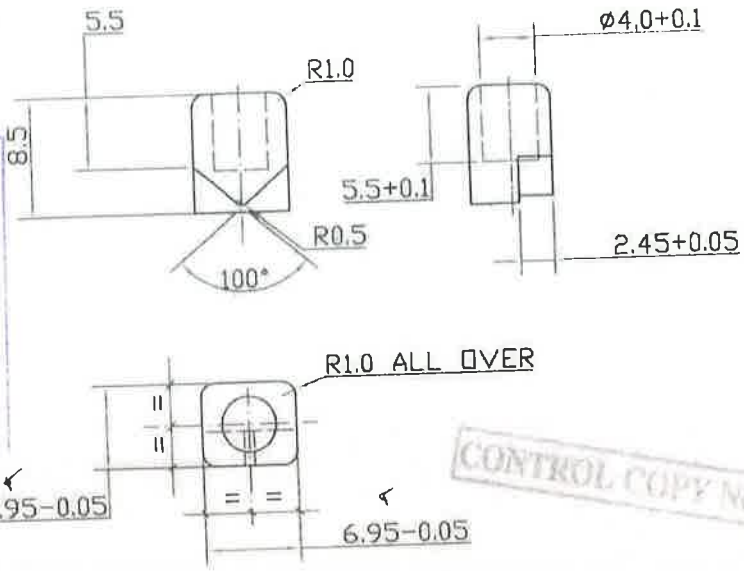

आरेखण की सही प्रमाणित प्रतिलिपि दिनाँक.....
Certified as correct copy of drg. on.....
उप प्रबन्धक / प्रबन्धक
Dy. Works Manager / Manager
ARDE, PUNE

CONTROL COPY No. 2

NOTES:
1) REMOVE ALL SHARP EDGES AND BURRS
2) HARDNESS : 500–600 HV
3) HEAT TREATMENT : CASE HARDENED TO A DEPTH OF 0.10 TO 0.30
4) ALT.MATERIAL : MIM 9310 (AISI–9310 EQUIVALENT)
HARDNESS: 500–600 HV, CASE DEPTH–0.1 TO 0.3mm.

S No	DATE	AUTHORITY	BRIEF RECORD	ZONE	CD	GO
5	07/11/2016	M–36	DIMN. 5.5+0.1 WAS 5.5–0.1	B–3		
4	09/11/2015	M–29	DRG. REVISED	C–2 B–3		
3	17/08/2015	M–28	DIMN.6.95–0.05 WAS 6.4–0.05 R1.0 ADDED	D–1,2		
2	14/07/2015	M–27	ALT.MATERIAL ADDED	B–2		
1	7/3/14	M–21	DIMN100° WAS 90° DIMN.2.45+0.05 ADDED DIMN. 5.5 WAS 5.35 DIMN.3.5 DELETED	B–3,4 A–2 C–3		

SIGN

DRN PRANAV
CHD
APPD
DATE 07/11/2016 for Director
SEALED
DATE

MATERIAL:
STEEL TO IS:4432–1988,Gd.13Ni13Cr3 (En–36B)

PROTECTIVE FINISH: PHOSPHATED TO SPECN. IS:3618–1966, CLASS 'B'

SCALE 2:1
EST MASS

TITLE
PLUNGER WHEEL LOCK

DESIGN AUTHORITY
ARDE
PUNE 411021

DRG.No.	IC	SS	S	AA	A	C	SST
	0204	03	02	02	18	006	00DF

PART No
DS CAT No
AHSP

21-11-16

DRG.No.	IC	SS	S	AA	A	C	SST
	0204	03	02	02	18	007	00DC

GEN TOL FINE/MEDIUM/COARSE CLASS TO IS:2102

DRG CONVENTIONS CONFIRM TO INDIAN STD DIMN IN mm UNLESS OTHERWISE STATED

Drg verified on 14/3/16

CONTROL COPY No.07

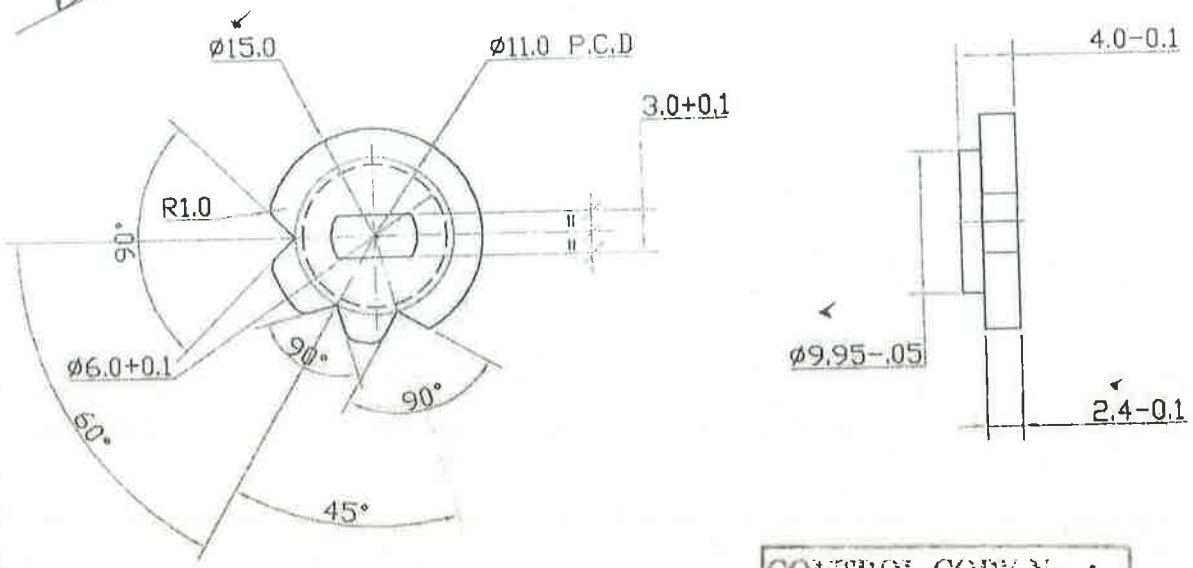

CONTROL COPY No. 1

NOTES :- 1) REMOVE ALL SHARP EDGES AND BURRS
2) TOL. FOR ANGLES± 30' UNLESS OTHERWISE STATED
3) HARDNESS : 500 TO 550 HV
4) HEAT TREATMENT : CASE HARDENED TO A DEPTH OF 0.13 TO 0.26
5) ALT.MATERIAL ; MIM 9310 (AISI 9310 EQIVALENT)
HARDNESS: 500-600 HV, CASE DEPTH-0.1 TO 0.3 mm

Received on 29/11/15

S No	DATE	AUTHORITY	BRIEF RECORD	ZONE	SIGN CD	SIGN GO
2	18/11/15	M-29	ALT. MATERIAL MODIFIED	D-2,3		
1	14/7/15	M-27	ALT. MATERIAL ADDED	D-2,3		

DRN KSD CHD

APPD DATE 18/11/2015 For Director

SEALED DATE

SCALE 2:1 EST MASS

DESIGN AUTHORITY ARDE PUNE 411021

MATERIAL: STEEL TO IS: 4432 1988 Gr 13Ni13Cr3 (En-36B)

PROTECTIVE FINISH: PHOSPHATED TO SPECN IS:3618-1966, CLASS 'B'

TITLE

WHEEL LOCK

Certified as correct copy of drg. on 13/3/18

DRG.No.	IC	SS	S	AA	A	C	SST
	0204	03	02	02	18	007	00DC

PART No | DS CAT No | AHSP

DRG.No.	IC	SS	S	AA	A	C	SST
	0204	03	02	02	18	019	00DA

GEN TOL FINE/MEDIUM/COARSE CLASS TO IS:2102

DRG CONVENTIONS CONFIRM TO INDIAN STDS. DIMN IN mm UNLESS OTHERWISE STATED

CONTROL COPY No. 1

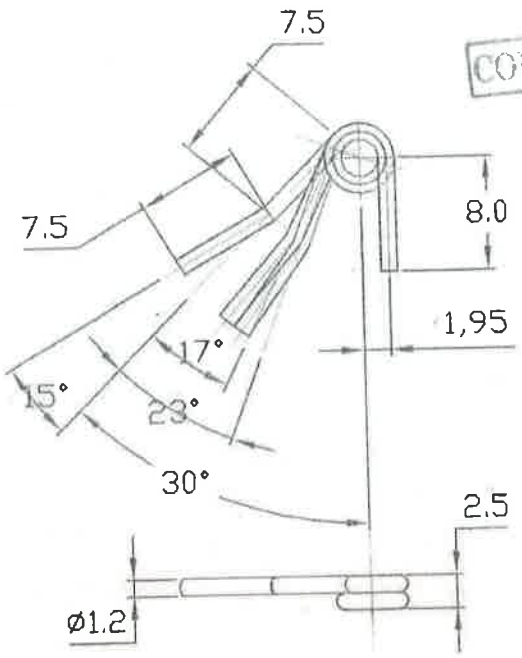

आरक्षण की सही प्रमाणित प्रतिलिपि दिनाँक.....
Certified as correct copy of drg. on.....
कार्यशाला प्रबंधक
Jr. Work Manager
मानक प्रकोष्ठ
STANDARD CELL

STRESS RELIEVED

SPRING WIRE DIA--1.2mm

MEAN COIL DIA -- 3.9

No.OF EFFECTIVE COIL---2

LOAD AT 17° = 1.34 kg±10%

LOAD AT 23° = 1.82 kg±10%

Drg verified on 14/3/16

Received on 29/11/15

S No	DATE	AUTHORITY	BRIEF RECORD	ZONE	CD	GO
					SIGN	

DRN KSD KSD CHD

APPD DATE 07/03/2014 for Director

SEALED DATE

SCALE 2:1 EST MASS

DESIGN AUTHORITY ARDE PUNE 411021

MATERIAL:- STEEL TO IS:4454,pt-1, 2001 DH

PROTECTIVE FINISH :- PHOSPHATED TO SPECN. 'JSS-0465-01-1988', CLASS-II, OIL FINISH.

TITLE

SPRING,LEVER CATCH MAGAZINE

DRG.No.	IC	SS	S	AA	A	C	SST
	0204	03	02	02	18	019	00DA

PART No | DS CAT No | AHSP

DRG.No.	IC	SS	S	AA	A	C	SST
	0204	03	02	02	18	020	00DA

GEN TOL FINE/MEDIUM/COARSE CLASS TO IS:2102

DRG CONVENTIONS CONFIRM TO INDIAN STD DIMN IN mm UNLESS OTHERWISE STATED

NOTE:
1) REMOVE ALL SHARP EDGES AND BURRS
2) DIMENSION MARKED * MAY BE READ AS 0.2x45°

आरेखण की सही प्रमाणित प्रतिलिपि दिनाँक.....
Certified as correct copy of drg. on.....
के.के. शर्मा प्रबन्धक
Jr. Works Manager
मानक प्रकोष्ठ
STANDARD CELL

CONTROL COPY No. 1

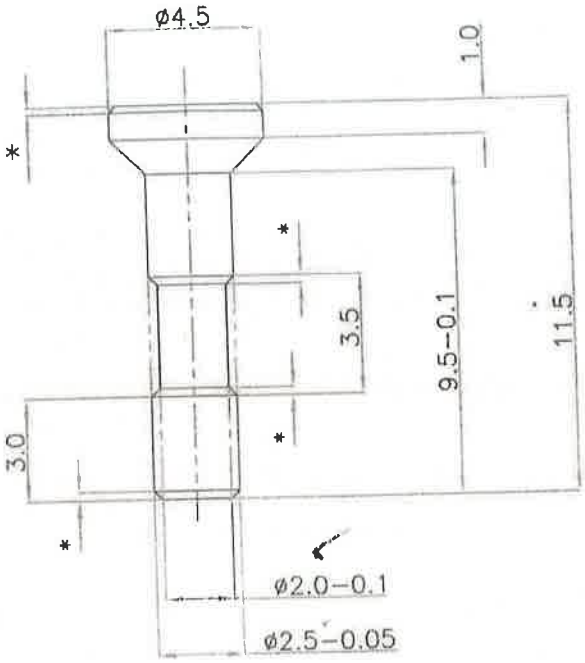

Drg verified on 14/3/16

Received on 29/11/15

S No	DATE	AUTHORITY	BRIEF RECORD	ZONE	CD	GO
					SIGN	

DRN PGG | CHD

APPD DATE 07/03/2014 For Director

SEALED DATE

SCALE 5:1 | EST MASS

DESIGN AUTHORITY ARDE PUNE 411021

MATERIAL: STEEL TO IS: 5517−1993, Gd 55C8 (En−9)

PROTECTIVE FINISH: PHOSPHATED TO SPECN IS:3618−1966, CLASS 'B'

TITLE

PIN LEVER CATCH MAGAZINE

DRG.No.	IC	SS	S	AA	A	C	SST
	0204	03	02	02	18	020	00DA

PART No | DS CAT No | AHSP

0 2 0 4 (IC)	0 3 (SS)	0 2 (S)	0 2 (AA)
1 8 (A)	0 2 1 (C)	0 0 D A (SST)	

GEN.TOL.MEDIUM/COARSE/FINE CLASS TO IS:2102

DRAWING CONVENTION CONFIRM TO INDIAN STDS
DIMN IN mm UNLESS OTHERWISE STATED

NOTE:- STRESS TO BE RELIEVED

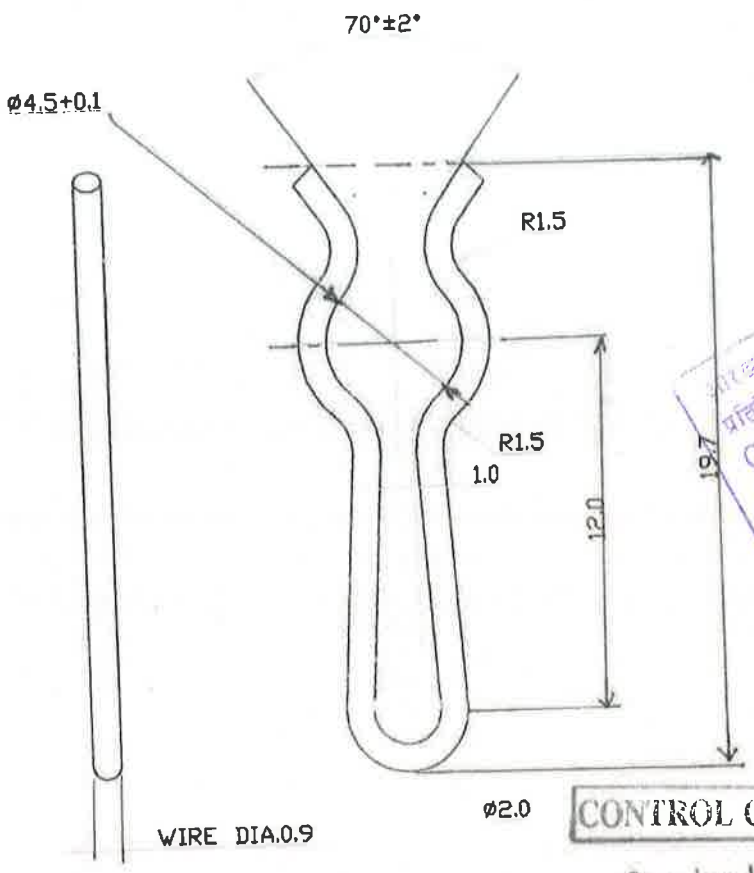

CONTROL COPY No. 1

Received On 29/11/15

Drg Verified 14/3/16

प्रतिलिपि को सही प्रमाणित
प्रतिलिपि दिनांक
Certified to be correct copy of drg. on 13/2/18

1. R NO	DATE	AUTHORITY	BRIEF RECORD	ZONE	CD / GD SIGN
DRN KSD		CHD	MATERIAL :- STEEL TO IS:4454 Pt-1,2001, DH		
APPD DATE 7/03/2014		FOR DIRECTOR	PROTECTIVE FINISH :- PHOSPHATED TO SPECN. IS:3618-1966,CLASS 'B'		
SEALED DATE					
SCALE 5:1		EST MASS	TITLE SPRING LOCKING PIN TRIGGER MECHANISM		
DESIGN AUTHORITY ARDE					
DRG NO	0 2 0 4 (IC)	0 3 (SS)	0 2 (S)	0 2 (AA)	1 8 (A) 0 2 1 (C) 0 0 D A (SST)
PART NO		DS CAT NO		AHSP	

20·4·14

(68)

DRG.No.	IC	SS	S	AA	A	C	SST
	0204	03	02	02	18	017	00DA

GEN TOL FINE/MEDIUM/COARSE CLASS TO IS:2102

DRG CONVENTIONS CONFIRM TO INDIAN STD DIMN IN mm UNLESS OTHERWISE STATED

CONTROL COPY No. 1

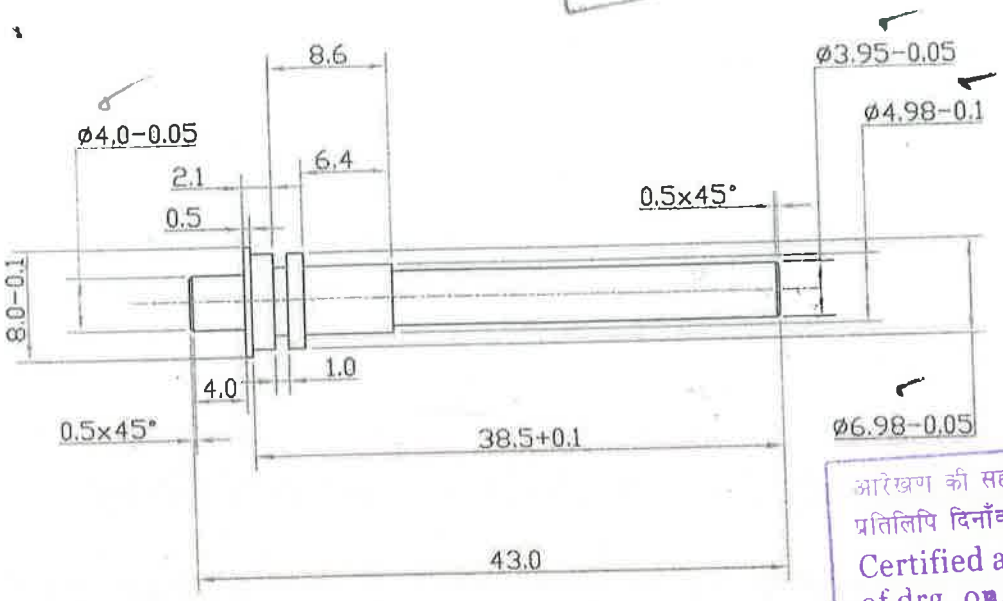

आरेखण की सही प्रमाणित प्रतिलिपि दिनाँक 7/11/2018
Certified as correct copy of drg. on.....
Jt. Works Manager
STANDARDISATION

NOTES: 1) REMOVE ALL SHARP EDGES AND BURRS
2) HEAT TREATMENT : HARDENED TO 500–550 HV WITH CASE DEPTH 0.13 TO 0.26

Dly verified on 14/3/16

Received on 29/11/15

S No	DATE	AUTHORITY	BRIEF RECORD	ZONE	CD	GO
					SIGN	

DRN SD | CHD

APPD DATE 07/03/2014 For Director

SEALED DATE

SCALE 2:1 | EST MASS

DESIGN AUTHORITY ARDE PUNE 411021

MATERIAL: STEEL TO IS:4432 1988, Gr 13Ni13Cr3 (En-36B)

PROTECTIVE FINISH: PHOSPHATED TO SPECN IS:3618-1966, CLASS 'B'

TITLE

PIN AUTO SEAR

DRG.No. 0204 (IC) 03 (SS) 02 (S) 02 (AA) 18 (A) 017 (C) 00DA (SST)

PART No | DS CAT No | AHSP

DRG. MODIFIED

CONTROL COPY No. 1

DRG.No. 0204 IC 03 SS 02 S 02 AA 18 A 015 C 00DB SST

GEN TOL FINE/MEDIUM/COARSE CLASS TO IS:2102

DRG CONVENTIONS CONFIRM TO INDIAN STD DIMN IN mm UNLESS OTHERWISE STATED

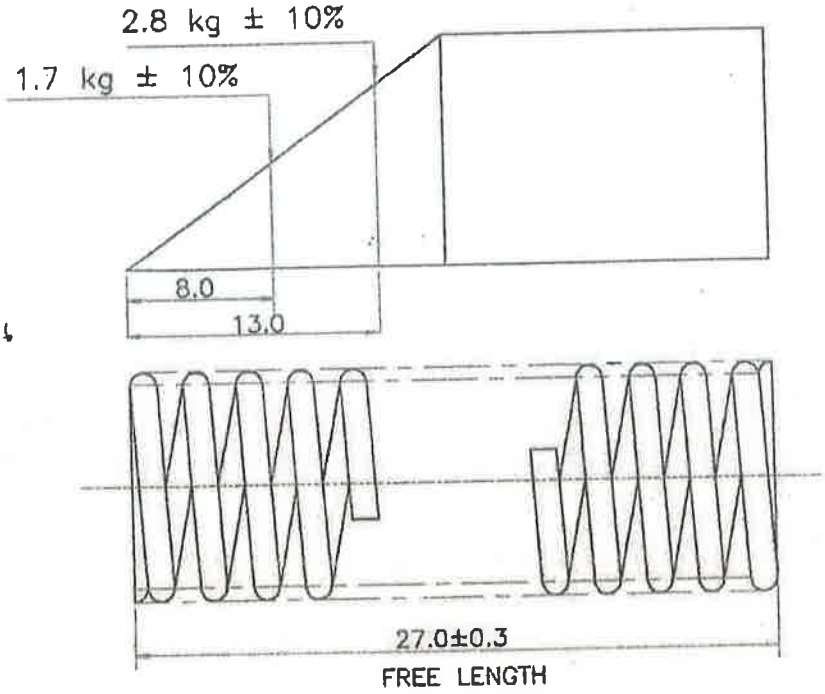

Dy verified on 14/3/16

NOTES:

STRESS RELIEVED
WIRE DIA : 0.70
MEAN DIA : 4.0±0.2
No.OF EFFECTIVE COILS :18
WOUND : L H OR R H

CRAMP TEST:-SPRING TO BE TESTED BEFORE GAUGING BY COMPRESSION TO A LENGTH OF 10.0mm FOR A PERIOD OF 12,HOURS AFTER WHICH IT MUST CONFORM TO FREE LENGTH.

ONE COIL OF EACH END TO BE CLOSED IN AND GROUND SQUARE TO THE AXIS OF THE COIL, LEAVING 3/4 OF COIL AT EACH END. NON EFFECTIVE

Received on 29/11/15

20.7.2015

S No	DATE	AUTHORITY	BRIEF RECORD	ZONE	CD	GO
1.	07/10/14	M-25	DRAWING REVISED			

SIGN

DRN RGN. CHD

APPD DATE 07/10/2014 For Director

SEALED DATE

SCALE 5:1 EST MASS

DESIGN AUTHORITY
ARDE
PUNE 411021

MATERIAL:
STEEL TO IS:4454 (Pt-1)2001, DH

PROTECTIVE FINISH: PHOSPHATED TO SPECN. IS: 3618-1966, CLASS 'B'

TITLE
SPRING SEAR

DRG.No. 0204 IC 03 SS 02 S 02 AA 18 A 015 C 00DB SST

PART No | DS CAT No | AHSP

Certified as copy of drg. on 13/7/18
Dr. Workshop Officer
STANDARD CEL

DRG.No.	IC	SS	S	AA	A	C	SST
	0204	03	02	02	18	016	00DC

GEN TOL FINE/MEDIUM/COARSE CLASS TO IS:2102

DRG CONVENTIONS CONFIRM TO INDIAN STD DIMN IN mm UNLESS OTHERWISE STATED

CONTROL COPY No. 1

NOTES:
1) REMOVE ALL SHARP EDGES AND BURRS
2) CASE HARDENED TO DEPTH OF 0.10 TO 0.30
3) HARDNESS: 500 TO 600 HV
4) ALT.MATERIAL : MIM 9310 (EQUIVALENT INTERNATIONAL STANDARD AISI 9310)

HARDNESS: 500 TO 600 HV
CASE DEPTH: 0.1–0.3MM

प्रतिलिपि दिनांक 28/11/15
Certified as correct copy of drg. on
Jr. Works Manager

28/11/15 ARDE Ref

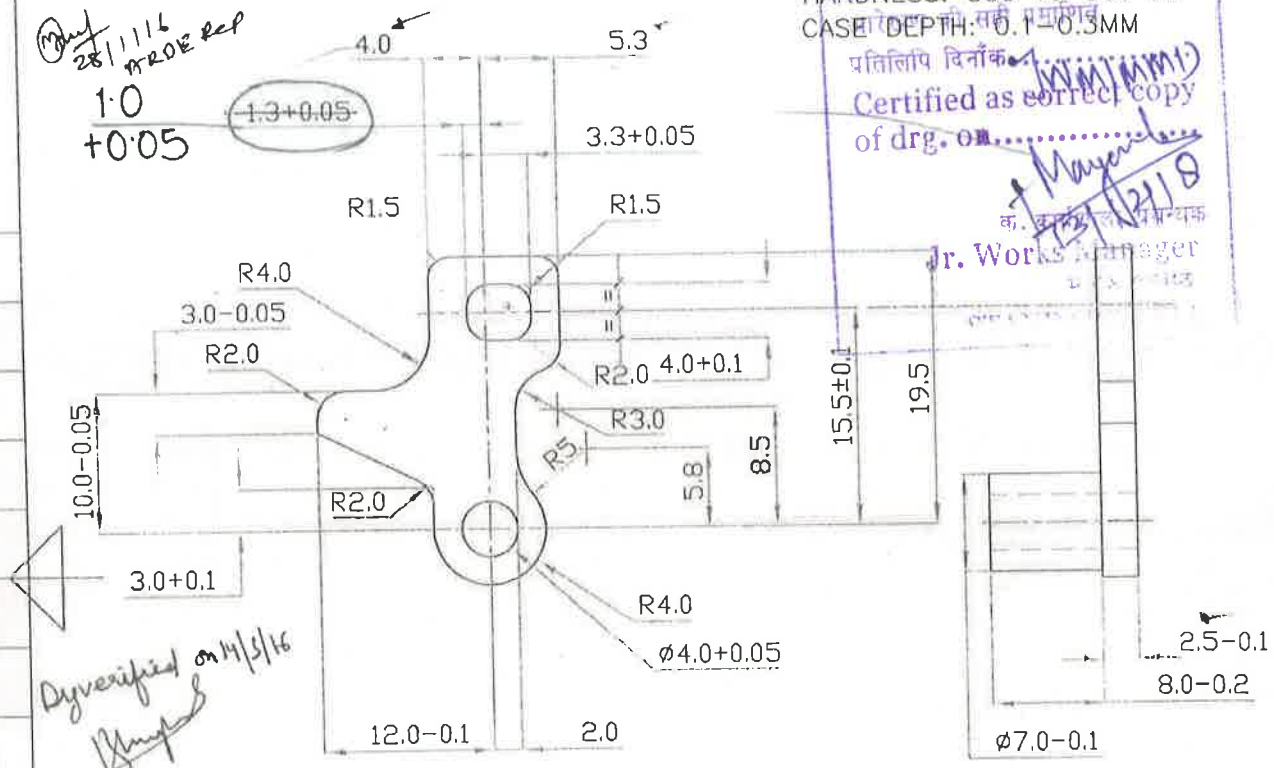

Dy verified on 14/5/16

CONTROL COPY No. 1

Received on 29/11/15

S No	DATE	AUTHORITY	BRIEF RECORD	ZONE	CD	GO
2	23/11/15	M-29	ALT. MATERIAL & HARDNESS REVISED	B-2,3		
1	14/8/15	M-28	ALT. MATERIAL ADDED	B-2,3		

SIGN

DRN RGN CHD

APPD DATE 23/11/15 Director

SEALED DATE

SCALE 2:1 EST MASS

DESIGN AUTHORITY ARDE PUNE 411021

MATERIAL: STEEL TO IS:4432 1988, Gr 13Ni13Cr3 (En-36B)

PROTECTIVE FINISH: PHOSPHATED TO SPECN IS:3618–1966, CLASS 'B'

TITLE

AUTO SEAR

DRG.No. 0204 (IC) 03 (SS) 02 (S) 02 (AA) 18 (A) 016 (C) 00DC (SST)

PART No | DS CAT No | AHSP