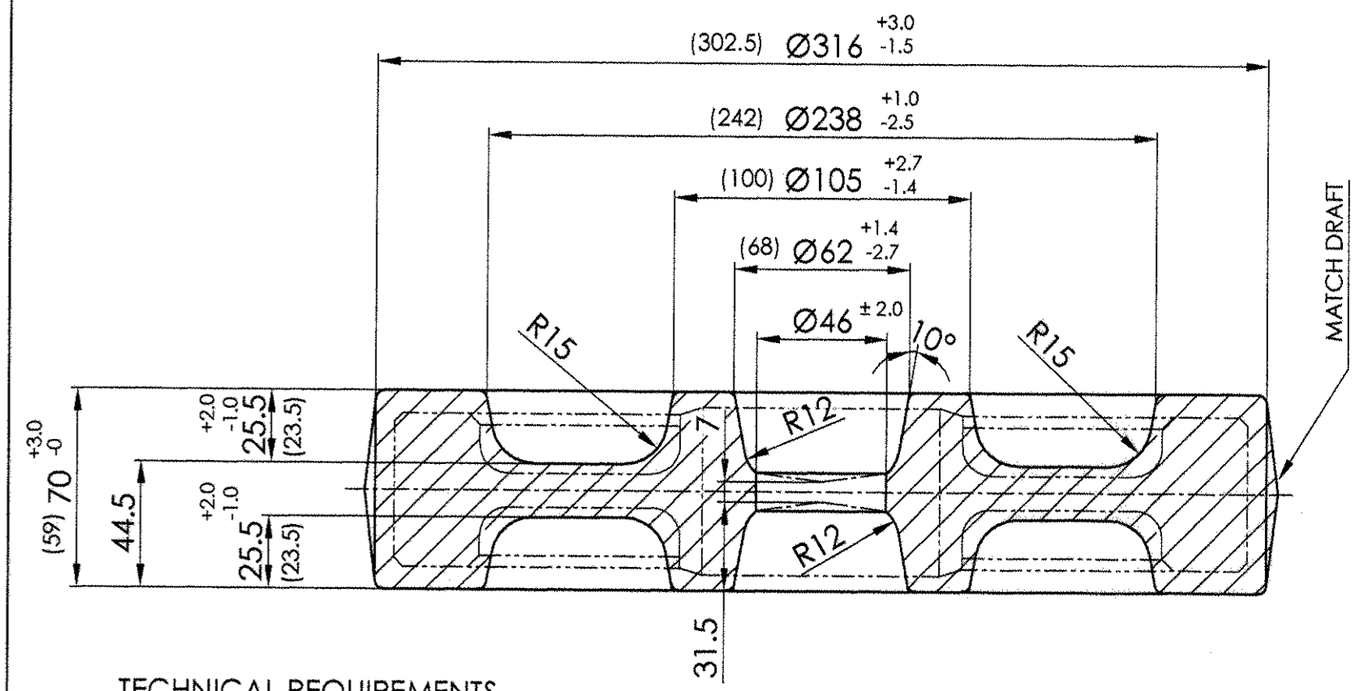


| CHEMICAL COMPOSITION (%) | | |
|---|---|---|
| ELEMENT | STEEL 20X2H4A GOST 4543-71 | STEEL 835M15 (EN-39B) BS: 970-83 |
| C | 0.16 - 0.22 | 0.12 - 0.18 |
| Si | 0.17 - 0.37 | ---------- |
| Mn | 0.30 - 0.60 | 0.25 - 0.50 |
| Cr | 1.25 - 1.65 | 1.00 - 1.40 |
| Ni | 3.25 - 3.65 | 3.90 - 4.30 |
| Mo | ---------- | 0.15 - 0.30 |
| Cu | 0.30 MAX. | ---------- |
| S | 0.025 MAX. | 0.040 MAX. |
| P | 0.025 MAX. | 0.035 MAX. |

| MECHANICAL PROPERTIES | | |
|---|---|---|
| DESCRIPTION | STEEL 20X2H4A GOST 4543-71 | STEEL 835M15 (EN-39B) BS: 970-83 |
| TEST BAR DIA. | ------ | 19 mm |
| TENSILE STRENGTH | 130 Kgf/mm² MIN. | 1310 MPa MIN. |
| YIELD STRENGTH | 110 Kgf/mm² MIN. | ----- |
| RELATIVE ELONGATION | 9 % MIN. | 8 % MIN. |
| RELATIVE COMPRESSION | ------ | |
| REDUCTION OF AREA | 45 % MIN. | ------ |
| HARDNESS BHN | 207 - 269 | 207 - 269 |
| IMPACT STRENGTH | 8 Kgf.m/cm² MIN. | ------ |
| IZOD | ------ | 25 MIN. |
| KCV (CHARPY) | ------ | 28 MIN. |

## TECHNICAL REQUIREMENTS.

1. HEAT TREAT.DIA.OF IND. 3.7-4.2 mm. (BHN 207-269)
2. DESCALE.
3. DEPTH OF SURFACE DEFECTS AND SCALE PITS UPTO 0.5 OF ACTUAL MACHINING ALLOWANCE ARE ALLOWED.
4. MISMATCH SHOULD NOT EXCEED 1.3 mm.
5. RESIDUAL FIN ALONG PARTING LINE SHOULD NOT EXCEED 1.7 mm.
6. FOLDING OF FIN IN PIERCED HOLE IS ALLOWED.
7. BUCKLING SHOULD NOT EXCEED 1.0 mm.
8. MARK PART NO.
9. MARKING DEPTH NOT TO EXCEED 1.2 mm.
10. UNSPECIFIED DRAFTS = 7°
11. UNSPECIFIED DRAII = R 3.0 mm.
12. MACHINING DIMENSION ARE SHOWN IN BRACKETS.
13. UNTOLERANCED DIMENSIONS ARE FOR CONSTRUCTION / NOT TO BE CHECKED.
14. ECCENTRICITY OF PIERCED HOLE SHOULD NOT EXCEED 2.0 mm.
15. PAINT RED OXIDE.
16. PILOT SAMPLE SHOULD BE APPROVED BEFORE BULK SUPPLY.

VETTED
18 DEC 2007
JWM STD-CELL

ALTERNATE MATERIAL :- STEEL 835M15 (EN-39B) TO BS: 970-83
AUTHORITY :- CQA(HV) LETTER No. O91/IFD/IND-V/MTPF/OE DATED 17.03.2005

| | INTERMEDIATE GEAR (FORGING) | | STEEL 20X2H4A | GOST 4543-71 | | MASS = 28.0 Kg. |
|---|---|---|---|---|---|---|
| संख्या NO.OFF | विवरण DESCRIPTION | पुर्जा क्र. PART NO. | पदार्थ MATERIAL | मानक STANDARD | परिमाप DIMENSIONS | अभ्यक्ति REMARKS |

| सामान्य सहिष्णुता GENERAL TOLERANCE | |
|---|---|
| रेखिक परिमाप LINEAR DIMENSION | |
| 0-8 | ±0.1 |
| 6-30 | ±0.2 |
| 30-120 | ±0.3 |
| 120-315 | ±0.5 |
| 315-1000 | ±0.8 |
| 1000-2000 | ±1.2 |
| कोणिक परिमाप ANGULAR DIMENSION | |
| 1-10 | ±1° |
| 10-50 | ±30' |
| 50-100 | ±20' |
| >100 | ±10' |
| मापांक 'म्यू एम' में VALUE IN "um" | |
| ~ | >25 |
| ▽ | 8-25 |
| ▽▽ | 1.6-8 |
| ▽▽▽ | 0.025-1.6 |
| ▽▽▽▽ | <0.025 |

| संख्या NO.OFF | संबंधित पुर्जोका आरेखण क्र. DRG. NO. OF ASSOCIATED PART | सूचक INDEX | संशोधन ALTERATION | 2005 | दिनांक DATE | नाम NAME |
|---|---|---|---|---|---|---|
| | | | | आरेखित DRAWN | 24.11.05 | krb |
| | | | | जाँचा CHECKED | 24.11 | |
| | | | | अनुमोदित APPROVED | | |

INTERMEDIATE GEAR (FORGING DRG.)
FOR COMP. DRG. NO. 175-45-005 & 175-45-006
TRANSMISSION GEAR UNIT (CODE-45 / T-72 & T-90)

मापमान SCALE 1:2

द्वारा बदला REPLACED BY
हेतु बदला REPLACED FOR

मशीनी औजार आदिरूप फैक्टरी, अम्बरनाथ
MACHINE TOOL PROTOTYPE FACTORY, AMBERNATH

कार्यालय OFFICE D.O

आरेखण क्र. DRAWING NO. 175-45-005 / F

मूलमाप व अन्वायोजन NOMINAL SIZE & FIT | विचलन DEVIATION

इन आरेखणो तथा इसके साथ की सम्पूर्ण सामग्री का स्वत्वाधिकार भारत सरकार रक्षा मंत्रालय की भारतीय आयुध निर्माणियों के पास है। भारतीय आयुध निर्माणियों के महानिदेशक की लिखित अनुमति के बिना इनकी नकल या किसी भी रूप में इनके उद्धरण या इनमें समाहित सूचना किसी अनधिकृत व्यक्ति को उपलब्ध नही कराई जानी चाहिए ।

THE COPYRIGHT OF THESE DRAWINGS AND ALL ATTACHMENTS THERE TO BELONGS TO THE INDIAN ORDNANCE FACTORIES, MINISTRY OF DEFENCE, GOVT. OF INDIA THEY SHOULD NOT BE COPIED,REPRODUCED IN ANY WAY OR THE INFORMATION CONTAINED THEREIN MADE AVAILABLE TO UNAUTHORISED PERSONS WITHOUT THE WRITTEN PERMISSION OF THE DIRECTOR OF ORDNANCE FACTORIES.

FORGING DEVELOPED FROM CQA(HV) DRG