| DC RFI NO | DATE | SIGN |
|---|---|---|
| | | |

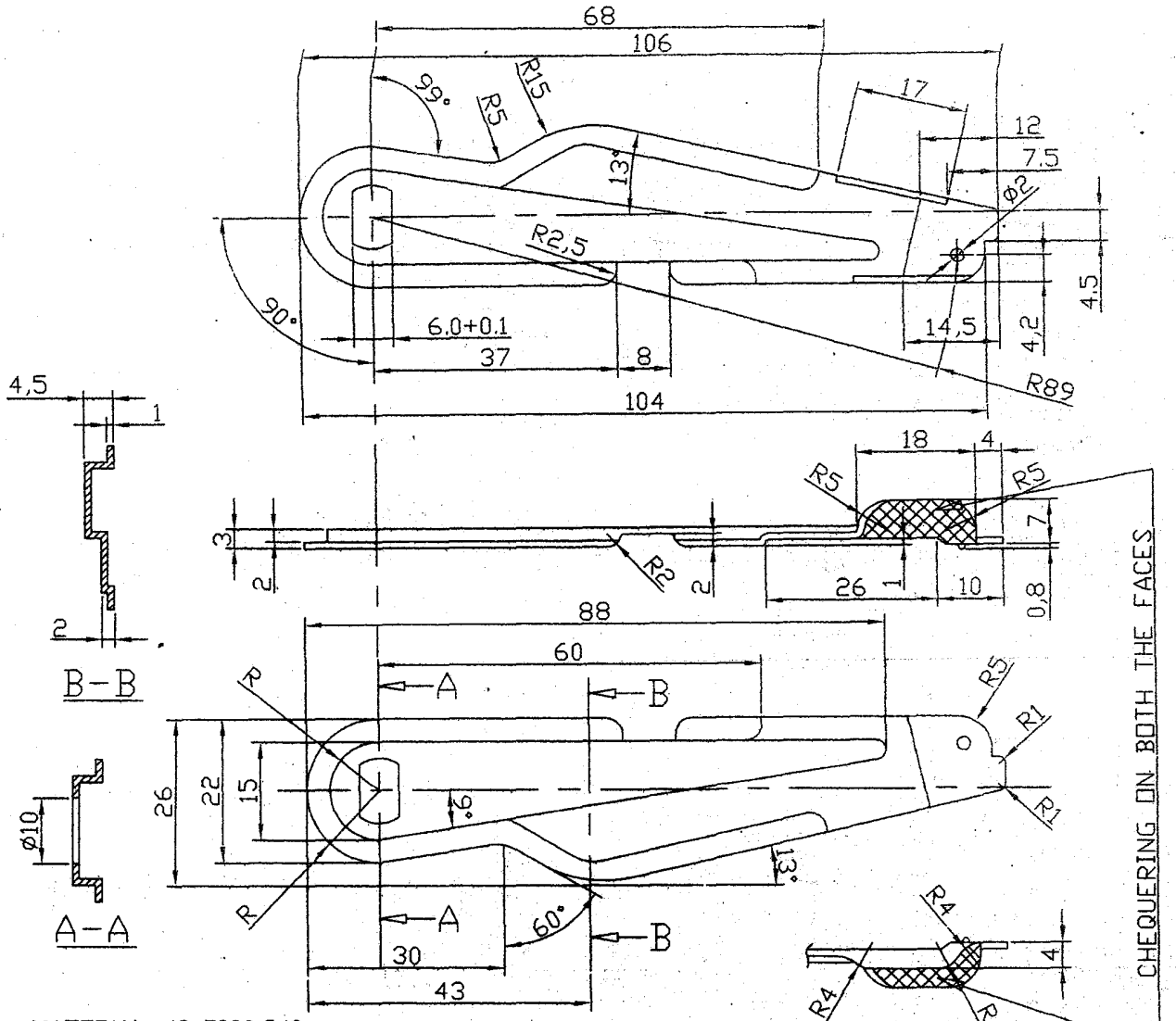


MATERIAL : IS: 7226 C40

HARDNESS:- 280-330 VPN

PHOSPHATE TO SPECN
JSS 0465-01-1988 CLASS I, OIL FINISH

NOTE :- 1. ALL DIMENSIONS ARE IN mm
2. NO TOOL MARK IS ACCEPTABLE ON FINISH COMP.
3. ALL UNTOLERATED DIMENSIONS ARE TO BE STRICTLY MAINTAINED AS PER IS:2102 MEDIUM CLASS

प्रमाणित प्रति, CERTIFIED COPY OF
ड्राइंग / लेआउट / गेज शिडयूल HCT / MPM
DRG/LAYOUT/GAUGE SCHEDULE
दिनांक / AT THIS DATE 29.05.18
सी डी डी / CDDC
राइफल फैक्टरी, ईशापुर
RIFLE FACTORY, ISHAPORE

| | 2018 | NAME | DATE |
|---|---|---|---|
| INDIAN ORDNANCE FACTORIES<br>RIFLE FACTORY<br>ISHAPORE | DESIGNED | M HAIT | 29/5/18 |
| | DRAWN | | |
| | CHECKED | | 29/5/18 |
| | APPROVED | | 25.05.18 |

| | | |
|---|---|---|
| 7.62mm ASSAULT RIFLE (GHAATAK)<br>MODIFIED LEVER CHANGE | SCALE 1:1 | DRAWING NO.<br>AR/012/1 -ALT/ RFI |
| | | SHEET - 1 OF - 1 |