FIRST ANGLE PROJECTION

13/A

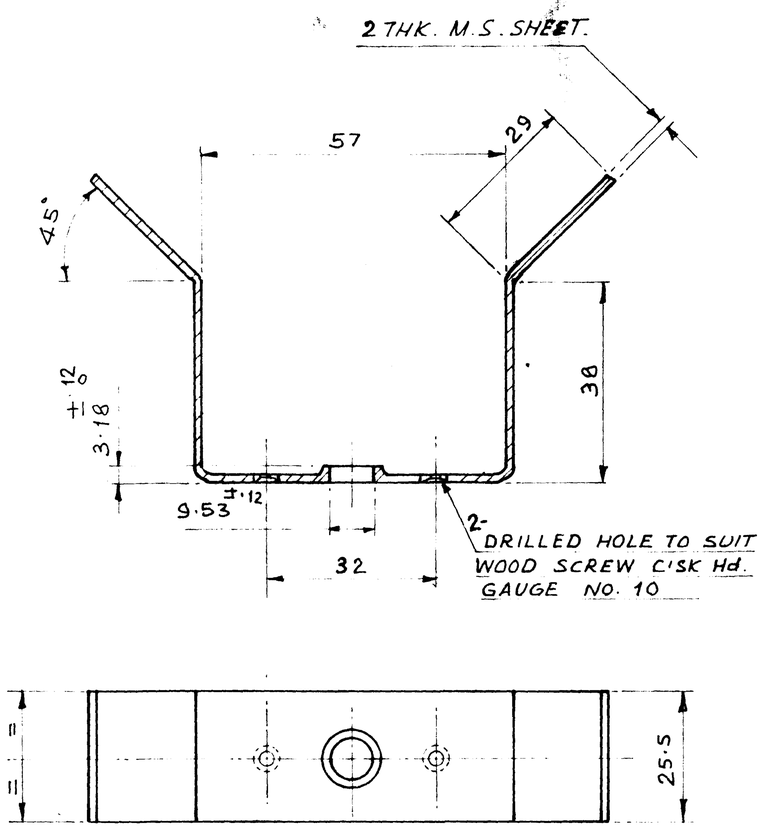

MATL :- M.S.
FINISH- PHOSPHATED TO SPECN. IS:3618 CLASS B.
NO. OFF - 1 PER SET.

13/B

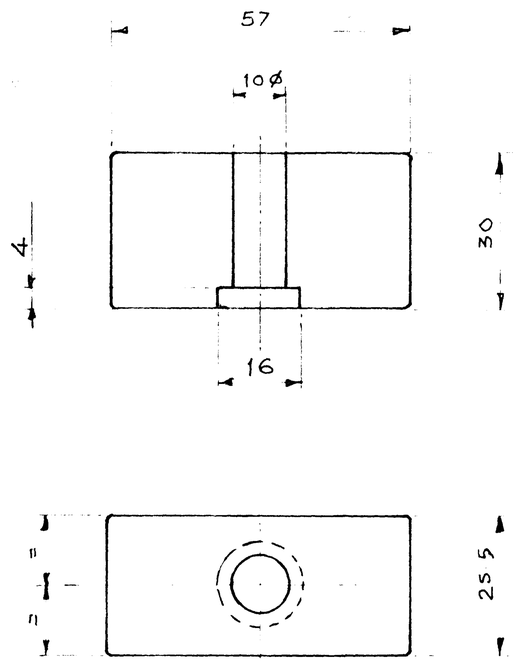

MATL- HARD WOOD G.C.Q
NO. OFF- 1 PER SET

FOR ASSLY. OF 13/A 13/B REF. ARM 1519 C4 ITEM 13

DIMENSIONS IN mm.

DRAWN BY	DRAWN	Santosh	TITLE :-
D&P. DRG. OFFICE	CHECKED		
&	TRACED	Santosh	CONTAINER
ISSUED BY DGAQA	CHECKED		(FOR TAIL UNIT NO. 1111)
MINISTRY OF DEFENCE	PASSED		
GOVT. OF INDIA	APPROVED		

AS STATED	AS STATED		ARM 1519 D1	1/1		8 DEC 83	1	ORIGINAL
MATL.	SPECN.	FINISH	ASSLY DRG. NO	SCALE	MOD	DATE	ISSUE	ALTERATION
IAF SEC REF NO				DRG. NO.				
PART NO				ARM 1519 B6				
SCHD NO	ARM 1519 SCHD.							
FILE NO				SHEET NO	6	NO OF SHEET	6	