DRAWING CONVENTIONS CONFORM TO IS: 696.

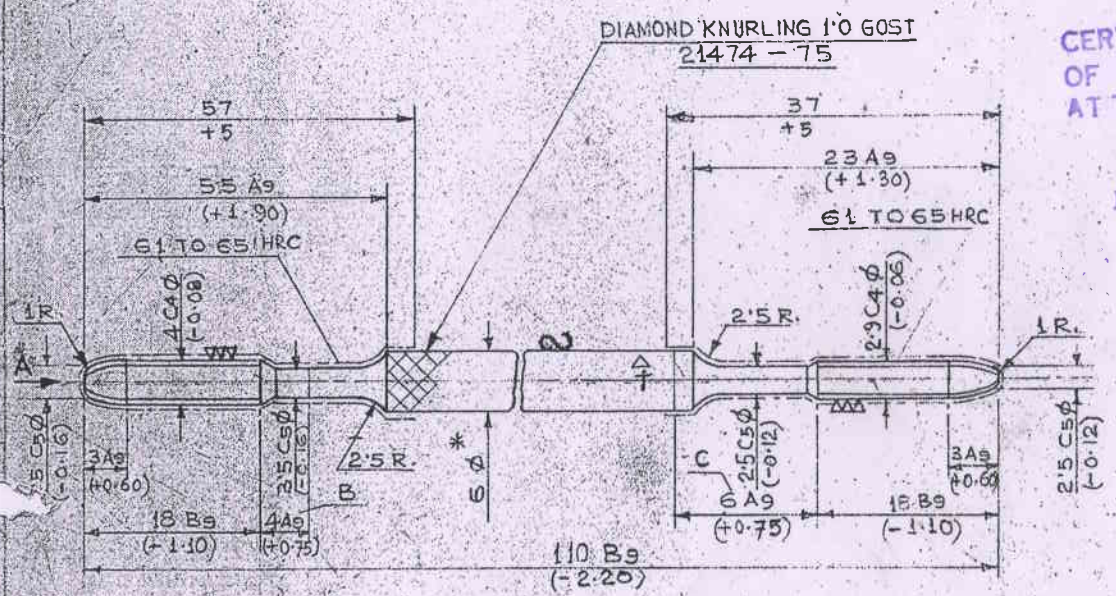

CERTIFIED CORRECT COPY OF APPROVED DRAWINGS AT THIS DATE 15.2.18
Design & Drawing Office
Ordnance Factory,
Tiruchirappalli-620016

UN CONTROLLED COPY

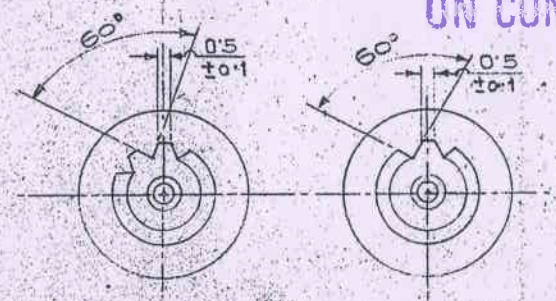

VIEW AT A
SCALE:- 5:1

VIEW AT D
SCALE:- 5:1

A·9401

17/8/04

MATERIAL :-
ROUND B-5 GOST 7417 – 75
Y10 GOST 1435 – 74

ALT. MATERIAL : STEEL Y12 AS PER GOST 1435 – 74.

MATERIAL FOR INDIA :-
IS:3748-1990, 103, T-3.

SURFACE FINISH :- AS PER IS: 3073-67, WHERE NOT SPECIFIED SHOULD BE ▽▽

* DIMENSION FOR REFERENCE.

HARDNESS TO BE CHECKED ON TEST PIECE.

INTERNAL CORNERS R = 0·4 mm.

SHARP EDGES TO BE BLUNTED ≈ 0·2 mm.

ON DIMENSIONS 'B' AND 'C' CUTS FROM MILLER ARE ALLOWED.

NUMBER OF TEETH : 10 ON TWO SIDES.

TEETH EDGES NEED NOT BE BLUNTED.

COATING :- CHEMICAL PHOSPHATING ACCELE-RATED/ VARNISH 6φ-4, BLACK III A, GOST 12172 – 74.

STAMP 'K' (DIMENSIONAL ACCEPTANCE) AND 'W' (HARDNESS CORRECTNESS) ON A TAG.

REMAINING TECHICAL REQUIREMENTS ARE AS PER 6011 TY SPECIFICATIONS.

MARKING NOTE :-
TO BE MARKED ON COMPONENT BY PUNCHING / ETCHING AFTER PRODUCING FLAT SURFACE.
Δ – Yr of Mfg
+ – MANUFACTURER'S CODE

AUTHY.	DATE	ZONE	BRIEF RECORD	SIG.
25911-SA	30-3-04	E/6	MARKING NOTE ADDED & MARKING PLACE SHOWN ON DRG.	DAC
22617-SA	3-8-94		MATERIAL FOR INDIA AMENDED.	LT. COL
21989-SA	10-10-92		NOMEN. AMENDED AND DRG. PROV. RE-SEALED.	MAJ
21459-SA	14.11.91		NOMENCLATURE AMENDED & D-S CAT NO. ADDED	LT. COL
21058-SA	28-12-90		DRAWING REVISED RE-DRAWN. AND PROV. RE-SEALED.	LT. COL
			PREVIOUS D.C.(I) NOS. 18794-SA & 20358-SA.	COPY

	DATE	NAME
DGN.		
DRN.		S. Hansda
CHD.		
TRD.		
COMP.		

DT. 26.12.90 / C.; D.O.
SCALE :- 2:1 & 5:1
SEALED :- PROV. D.C.(I) 18794-SA, DT. 17.2.86

ASSY.
MATERIAL : AS STATED
DIMENSIONS ARE IN MILLIMETRES

CLEANER REGULATOR

CQA(SA) ICHAPUR
APPROVED DT. 4.1.86
NEG. PREPARED
DESIGNER'S REF. 6H014 1
DS. CAT. NO. 4933-000392

A9401