DRG. NO : SK-1252A

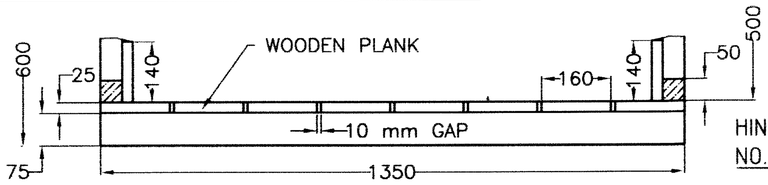

BOTTOM COVER OF BIG BOX

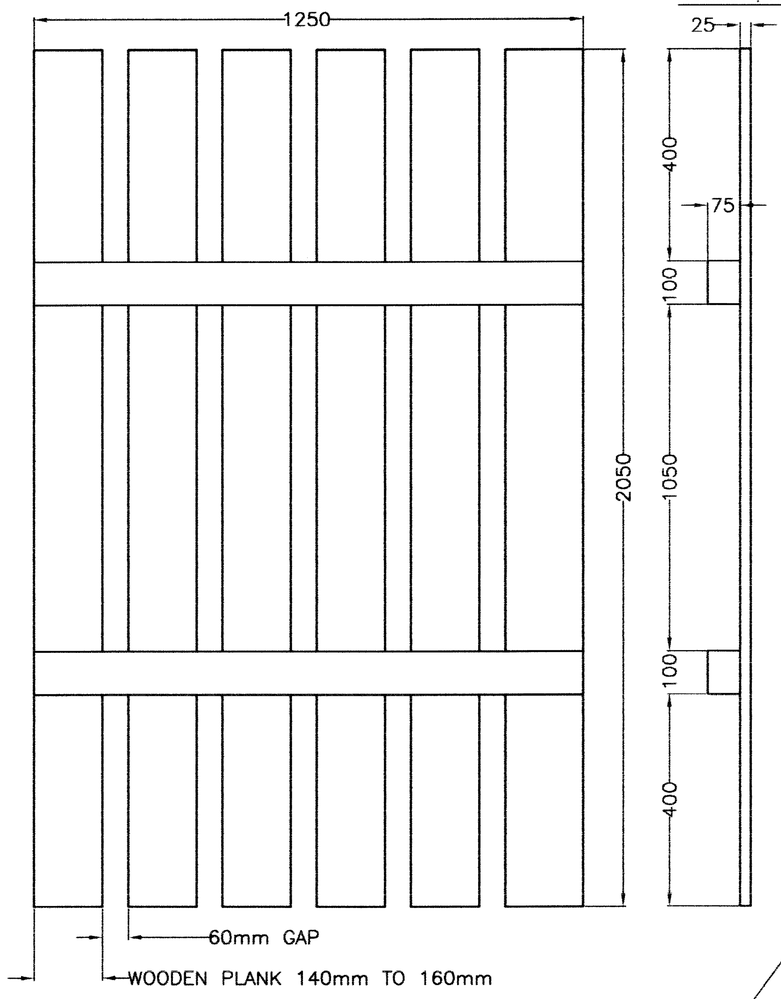

TOP COVER OF BIG BOX

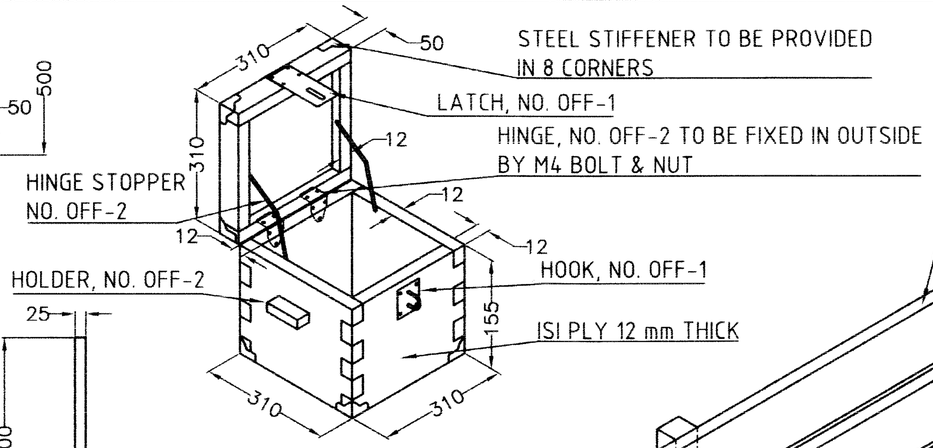

SMALL BOX
NO. OFF-2

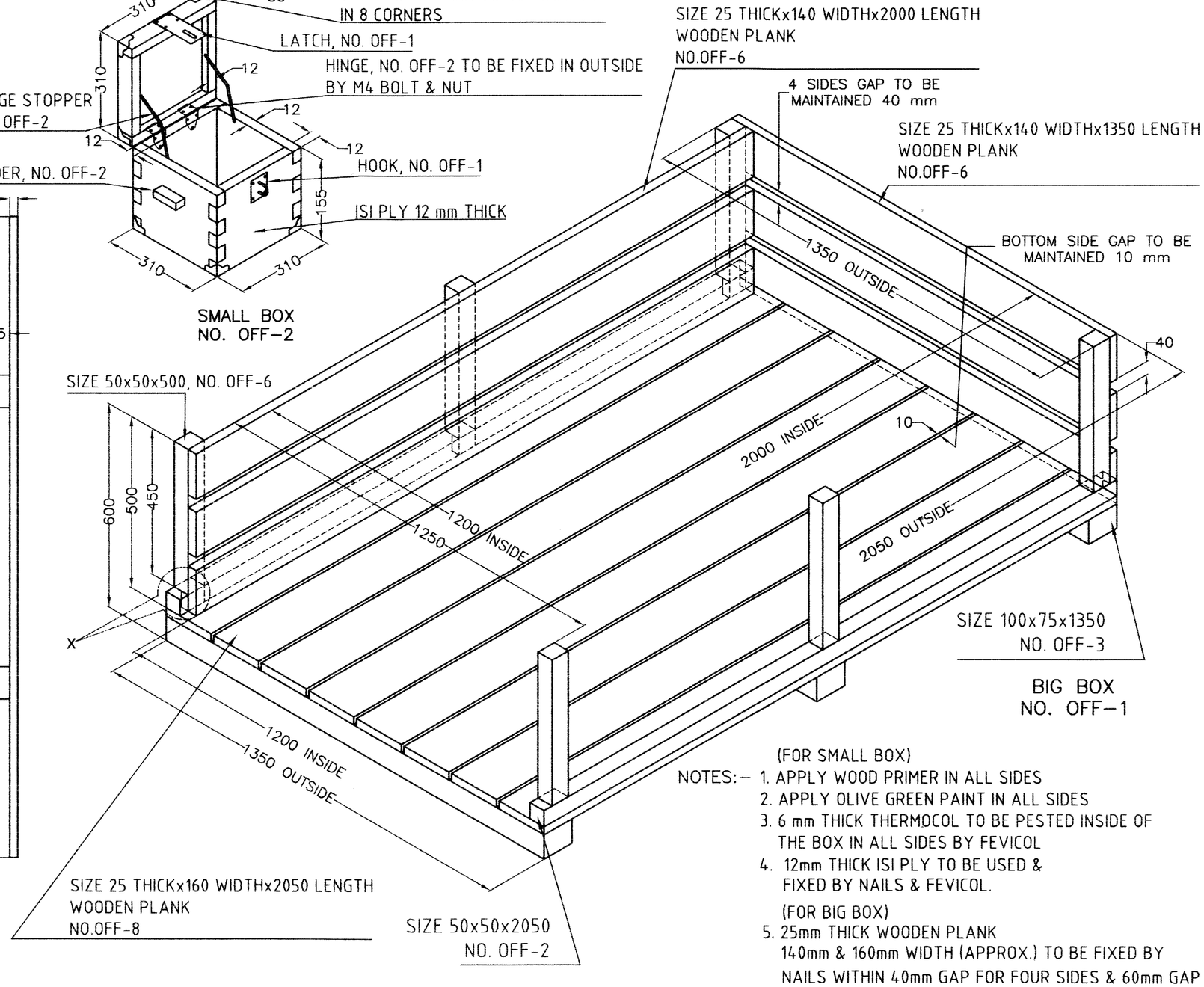

BIG BOX
NO. OFF-1

NOTES:–
(FOR SMALL BOX)
1. APPLY WOOD PRIMER IN ALL SIDES
2. APPLY OLIVE GREEN PAINT IN ALL SIDES
3. 6 mm THICK THERMOCOL TO BE PESTED INSIDE OF THE BOX IN ALL SIDES BY FEVICOL
4. 12mm THICK ISI PLY TO BE USED & FIXED BY NAILS & FEVICOL.

(FOR BIG BOX)
5. 25mm THICK WOODEN PLANK 140mm & 160mm WIDTH (APPROX.) TO BE FIXED BY NAILS WITHIN 40mm GAP FOR FOUR SIDES & 60mm GAP FOR TOP COVER & BOTTOM SIDE TO BE 10mm GAP.

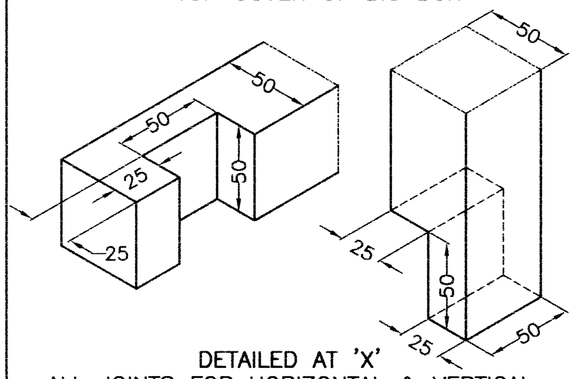

DETAILED AT 'X'
ALL JOINTS FOR HORIZONTAL & VERTICAL

REV	DATE	AMENDMENTS	SIGN
68/2012	16.05.12	DESIGN MODIFIED NEW NEGATIVE MADE DRG. NO. ADVANCED TO 'A'	AWM/BS

DIMENSIONS ARE IN mm.			
THIRD ANGLE PROJECTION			
SCALE – NTS			
2009		NAME	DATE
DRAWN		AMAL	26.02.09
CHECKED		–Sd– K.G.RAJANNA	02.03.09
JWM/CDD		–Sd– P.K.BAJAJ	02.03.09
APPVD.	JWM/BS	–Sd– A.K.ADHIKARI	03.03.09
	JT.GM/BS	–Sd– R.G.KAREMORE	03.03.09

MATERIAL : PACKING WOOD

NOMENCLATURE :
PACKING BOX FOR COMPONENTS OF AN–32 AIR CRAFT

STORE:– AN–32 AIR CRAFT

आर्डनैन्स फैक्टरी अम्बाझरी
ORDNANCE FACTORY AMBAJHARI

DRG. NO : SK–1252A

SHEET NO : 1
NO OF SHEETS : 1
OPERATION :
COMPT. VARIOUS