DRAWING NUMBER
Cb.3301-85-4A

SHEET No. 1 OF 1

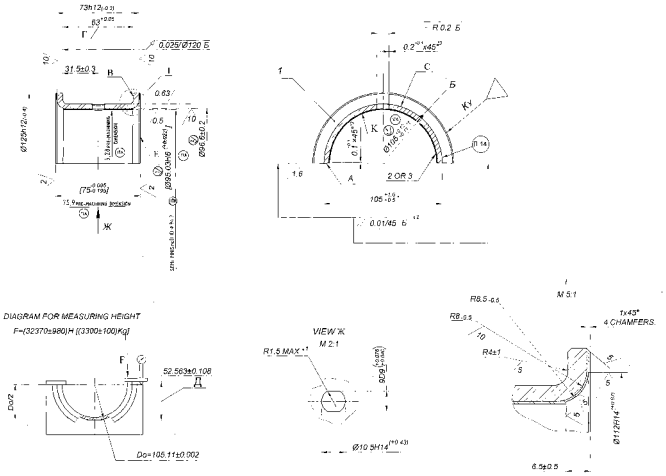

13. Match the upper thrust shell with lower thrust shell CB3301-86-4A as per height 'Д'.Total sum of height of paiving shell should be in the limits of 105,110, 105,142mm.Parallel dirt of surface JoinfA' of paiing shell from the axis of surface 'C' should not exceed 0.05mm.
14. Mark CB3301-86-4A and CB3301-86-4A with same seiial number for paiis and use togather.
15. * Dimension in free condition for reference
16. *Dimension to be ensured by Tool.
17. *Measure with the help of fixture in compressed state.
18. *It is permited to apply dimension as per gauge.
19. Runout of surfaces 'B' to be ensured before cutting.
20. It is allowed to mark the pairing number and sitting engrave final inspection stamp by electicerosion method.
21. It is allowed to carryout the measurement of cylindricity of external surface bitter fand machining without removing the mandrel.

				REMARKS
0.1 ABC BA	95.07	95.02	95.12	1 PRIOR THREAD "B" & "Г" IN THE ASSEMBLED ASSY. BOTH INSERTS (CB3-85-4A IN A DIFFERN ASSEMBLY "K" TO DIMENSIONS BY 95.12 TO 95.07 IN THE BORE INSERTS. FIXED CLEARANCE IS TO DIMENSIONS IN 0.05 TO 0.15
Ø118.0 BA	118.0	118.0	118.0	2 OTHER SURF. POLISHED IN SURFACES, TECHNICAL REQUIREMENTS, WITH MATERIAL AND ASSEMBLING TO THE DRAWING CB-1301-85-4A
CH. METAL LEAD PLATING	0.5	0.5	0.5	3 REPAIR NOT CATCHED IN CHAMFER OF THREAD BY ALL FIXTURE GRAPH

NOTE: SEE SIZE IS APPLICABLE ONLY FOR FIXTURE.

COMPARED TO V-16-C

				DRW		MATERIAL: Fe450 Gr. Cu 3301-02.30 CB 3301-85-4A
				CHK		
				APPD		FINISHED LIMITS OF QUALITY ACCORDANCE (RULY TOBULLS) 41.1978
				DATE		
				SCALE 1:1		
REF. NO. / REF. DATE	TO BE STAMPED ON ORIGINAL DRAWING PREVIOUS / NEW	LETTERS				
						UPPER THRUST INSERT ASSY
ALL COPYRIGHTS AND RIGHTS TO BE IN MINDS UNDER STANDARD STATED ENGINEERS CONTROL IS VALID IN ACCORDANCE WITH GOST 2.059 AND ALL RIGHTS ARE RESERVED.						Cb.3301-85-4A

USED ON	ZONE	ITEM NO	DRAWING NUMBER	D S CAT NUMBER	DESCRIPTION	QTY	REMARKS
Cb3301.15.44			**Cb.3301-85-4A**		**UPPER THRUST**		
			ITEM LIST		**INSERT ASSY.**		
		1	3301-85-4A		UPPER THRUST	1	
					INSERT STEEL 10		
					GOST 1050-88		
I/L CREATED BASED ON RUSSIAN ORIGINAL ISSUE – NIL					**MATERIAL**		
		2	-ND-		BRONZE OC 1-22		0.064 Kg IS
					OST 190054-72		ALLOWED TO
							CHANGE TO Pos.3
		3	-ND-		BRONZE C 30		0.064 Kg IS
					GOST 493-79		ALLOWED TO
							CHANGE TO Pos.2.

ISSUE	DATE	NATURE OF AMENDMENTS	ISSUE	DATE	NATURE OF AMENDMENTS

DRN		CONTROLLERATE OF QUALITY ASSURANCE (HEAVY VEHICLES) AVADI.		
CHD		TITLE : **UPPER THRUST INSERT ASSY.**		
APPD				
DATE	28. 8. 07	SHT. NO. 1 OF 1	D S CAT NUMBER	ITEM LIST FOR **Cb.3301-85-4A**

F-3
13

DRAWING NUMBER **Cb.3301-86-4A** SHEET No. 1 OF 1

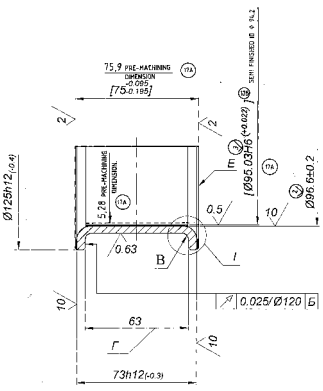

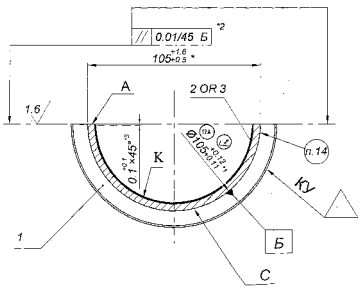

I
M 5:1

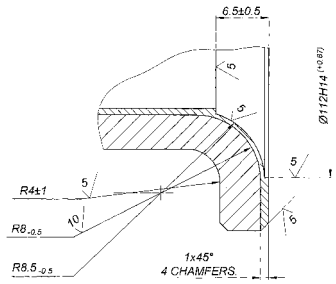

DIAGRAM FOR MEASURING HEIGHT

F=(32370±980)H [(3300±100)Kg]

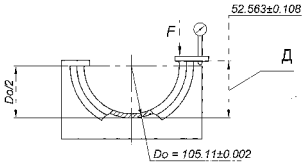

13. *Match the Lower thrust shell with upper thrust shell* СБ3301-85-4А as per height "Д". Total sum of height of pairing shell should be in the limits of 105,110... 105,142mm. Parallel dirt of surface Joint'A' of pairing shell from the axis of surface 'C' should not exceed 0.05mm.
14. Mark СБ3301-86-4А and СБ3301-85-4А with same serial number for parts and use together.
15. * Dimension in free condition-for reference.
16. *' Dimension to be ensured by Tool.
17. *'' Measure with the help of fixture in compressed state.
18. *'' It is permited to apply dimension as per gauge.
19. Runout of surfaces 'B' to be ensured before cutting.
20. It is allowed to mark the pairing number and sitting engrave final inspection stamp by electrocorrosion method.
21. It is allowed to carryout the measurement of cylindacity of external surface after final machining, without removing the Mandrel.

1. Requirements for Material and the quality of casting should be as per instruction TTM 43-87.
2. *Coating to be done with 01 or 3 microns thick zinc, 1micron* chromium as per ИЛ 749-88 after pairing shells which are to be sent as spare parts.
3. Surface K should be coated with lead thickness (0.015±0.005) mm as per(instructions) ИЛ 702-87. Bubbles, leakages, strips and non coating with Lead layer are not allowed. On all dimensioning surfaces except A, B, C and E lead coating is allowed. Lead coating to be done after machining in the crankcase assembly.
4. The alternative coating of surface K- Alloy 88-96 % Pb and 12-4% Sn.
5. Allowance for cylindricity of external surface should be 0.01mm before cutting.
6. The difference in thickness must not be more than 0.1mm before casting.
7. The difference in total thickness (steel+ bronze) before final machining of surface K should not be more than 0.1mm.
8. Carryout the machining as per Dimension in square brackets along with the assembly units of crank case.
9. It is permited to have the presence of dents with Diameter not more than 1.6 mm on the surface ' C ', with Depth not more than 0.2 mm with Quantity not more than 3 numbers.
10. Check the surface 'C' by bluing when compressed shells. The imprint should be covered minimum 80 % of the surface of the shell.
11. Dimension " Г " to be maintained before cutting. It is permited to change the dimension " Г " up to 62.94mm in free condition.
12. Dimenssion "Д " before coating to be checked in measuring fixture as per diagram.

OUT SIDE DIA	R1	R2	REMARKS
DIA	105 +0.14	106 +0.14	1. FINISH SURFACE 'E' & 'K' IN THE CRANKCASE ASSY. BORE INSERTS 3301-85-1A R1 & R2 OVER SURFACE 'K' TO DIMENSIONS OF 96.4+0.12 TO 96.6+0.12 mm BORE INSERTS OVER SURFACE 'E' TO DIMENSIONS OF 112+0.22 TO 112+0.35 mm.
INSIDE DIA	96,6 +0.2	96,6 +0.2	2. OTHER SIZES, ROUGHNESS OF SURFACES, TECHNICAL REQUIREMENTS AND MATERIAL ARE ACCORDING TO THE DRAWING Cb.3301-86-4A.
DIA. BEFORE LEAD PLATING	93,5 +0.05	93,5 +0.05	3. REPAIR SIZE CATEGORY R1 (108) R2 TO BE MARKED BY AN ELECTRO GRAPH.

NOTE: "R2" SIZE IS 'APPLICABLE ONLY' FOR V46-6 ENGINE.

PILOT SAMPLE SHOULD BE APPROVED BY A.I.S.P BEFORE BULK PRODUCTION.

EST. WT	TO BE STAMPED OR MARKED WHERE INDICATED THUS * (LETTERS)
0,614	

ALL SHARP EDGES AND CORNERS TO BE REMOVED UNLESS OTHERWISE STATED MACHINED CORNERS TO HAVE R OUTSIDE R INSIDE EQUIVALENT CHAMFERS ARE PERMISSIBLE

ISSUE	DATE	NATURE OF AMENDMENTS
17B	27.8.12	5th All Comm Meeting Hirutsu
		Point No 23 Dt. 26.10.99
17A	12-04-09	Kathy-EEPA S.I.No.17A/P/1005/028 Dt:25-05-09 AIM 87447/DN/DAX/FD Dt: 20-03-75 AIM17A/P/F00/R03 Dt:4.11.98

DWN		MATERIAL:-
CHD		
APPD		
DATE	05-9-07	CONTROL-GRADE OF QUALITY ASSURANCE (HEAVY VEHICLES)
SCALE:- 1:1		
DIMENSIONS IN mm		TITLE: **LOWER THRUST INSERT ASSY.**
TOLERANCE ON BOLTS UNLESS OTHERWISE STATED IN: IS:102-86		
ALL THREADS TO CONFORM TO		D.S. CAT NUMBER

USED ON:- Cb.3301-15-30, Cb.3301-15-4A

DRAWING NUMBER **Cb.3301-86-4A**

COMMON TO V 46-6

DRG. INDIANISED BASED ON RUSSIAN ORIGINAL ISSUE-17

F-3 IS 106 SIZE A1

USED ON	ZONE	ITEM NO	DRAWING NUMBER	D S CAT NUMBER	DESCRIPTION	QTY	REMARKS
Cb3301.15.44			**Cb.3301-86-4A**		**LOWER THRUST**		
			ITEM LIST		**INSERT ASSY.**		
		1	3301-86-4A		LOWER THRUST	1	
					INSERT STEEL 10		
					GOST 1050-88		
I/L CREATED BASED ON RUSSIAN ORIGINAL ISSUE – NIL					**MATERIAL**		
		2	-ND-		BRONZE OC 1-22		0.064 Kg IS
					OST 190054-72		ALLOWED TO
							CHANGE TO Pos.3
		3	-ND-		BRONZE C 30		0.064 Kg IS
					GOST 493-79		ALLOWED TO
							CHANGE TO Pos.2.

ISSUE	DATE	NATURE OF AMENDMENTS	ISSUE	DATE	NATURE OF AMENDMENTS

DRN		CONTROLLERATE OF QUALITY ASSURANCE (HEAVY VEHICLES) AVADI.		
CHD		TITLE : **LOWER THRUST INSERT ASSY.**		
APPD				
DATE	28.8.07	SHT. NO. 1 OF 1	D S CAT NUMBER	ITEM LIST FOR **Cb.3301-86-4A**