DRAWING NO.
155.29.2075A/IC

| MODIFICATIONS & ADDITIONS | | |
|---|---|---|
| ISSUE | MODIFICATIONS & 'N' OF 'A' | SIGN. |
| | | |

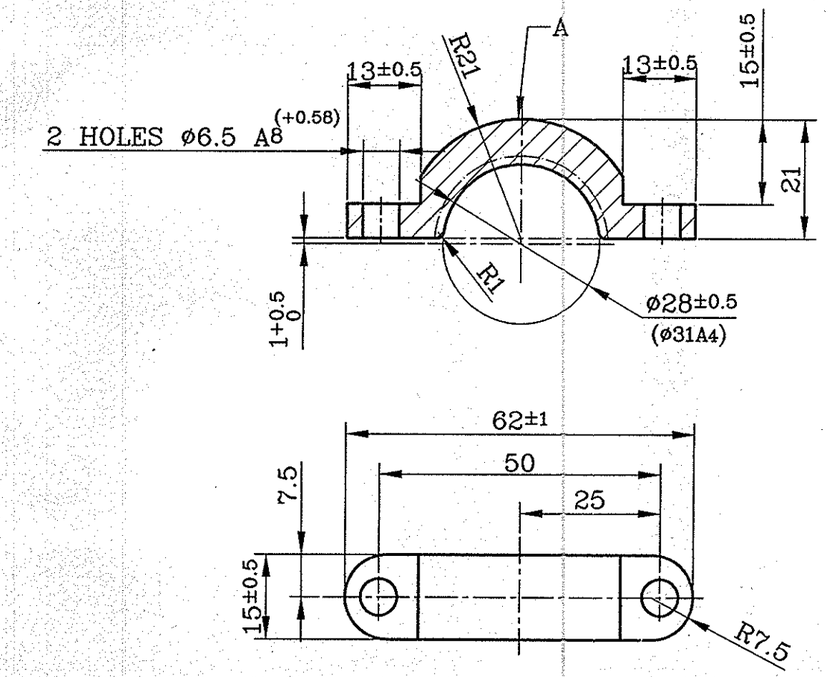


## TECHNICAL REQUIREMENTS.

1. DRAFTS 1 TO 50 UNSPECIFIED RADII SHOULD NOT EXCEED 2 MM.
2. REQUIREMENTS TO CASTING SEE ВТУЛ – 1 FOR ACCEPTANCE OF COMPONENT. CASTING SHOULD BE AS PER INVESTMENT PATTERN.
3. BURRS ARE NOT ALLOWED.
4. SHIFT OF HOLES ø 6.5 FROM TRUE POSITION SHOULD NOT EXCEED 0.4 MM TO ANY SIDE.
5. MAY BE MANUFACTURED FROM STEEL 45 Л I, 45Л II GOST 977–75.
6. COATING ZN 21, CHROMATIZING QUALITY AND THICKNESS OF COATING NOT TO BE CHEKED.
7. ON SURFACE 'A' RESIDUAL FROM GATE WITH HEIGHT UP TO 1.5 MM IS ALLOWED.
8. MACHINING DIMENSION IS GIVEN IN BRACKET.
9. MARK PART NO.

PILOT SAMPLE SHOULD BE APPROVED BEFORE BULK PRODUCTION.

Approved 16/8/2013

| MATERIAL | CASTING WT | |
|---|---|---|
| STEEL 40Л–1 GOST 977–75 | EST. WT.(Kg) 0.05 | |
| ALT. MATERIAL | | SCALE |
| 45Л I, 45Л II GOST977–75 | | 1:1 |
| DRAWN | CHECKED | APPROVED |
| CSELVI | 14/8/13 | |

DRAWING NO. 155.29.2075A/IC
NOMENCLATURE: STRAP

HEAVY VEHICLES FACTORY
AVADI, CHENNAI