AVNL_27 NOV 2021

DRAWING NUMBER 172.01.728-2 | SHEET No. 1 OF 1

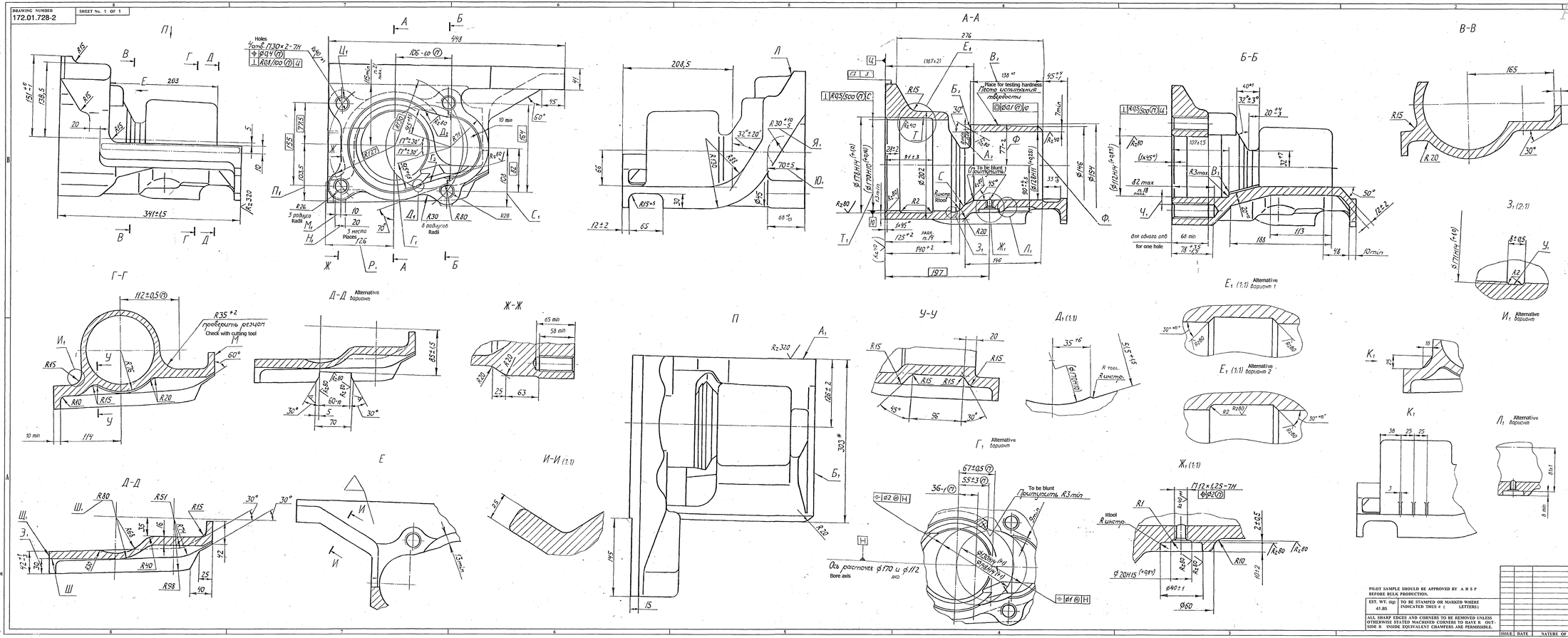

1. Steel grade, heat treatment, method of acceptance and test should be as per list on component made of special steel. Medium hardness.
2. Accuracy of casting 11T-0-0-9 GOST 26645-85.
3. External draft 1:50.
4. Un-specified casting radii 0^{+5} mm.
5. Requirements for casting should be as per specifications 172.TYS. In inaccessable places and mating places burn on§and buckle§is allowed.
6. Lugs designated by dot and dash lines with dimensions H_1, H_2, H_3, P_1, and C_1 (see main view) may be made along the entire length of boss.
7. On surface Л (see LH view) technological allowance is allowed.
8. On surface Н (see ГчГ) technological allowance shown by dot and dash lines (see right view) is allowed.
10. Dimensions given in the brackets are after welding the bracket to the hull.
11. On surfaces C and T (see A-A) shoulders 0^{+} mm are allowed.
12. To ensure dimensions δ (see A-A) flats may be made.
13. On surface U (see A-A) tool marks $0^{+0.2}$ mm are allowed.
14. Dimension T_1 (See A-A) with surface finish Rz=40 micron should be maintained over a length 125^{+2} mm, on the rest of the length $\phi 168H14^{(+0.4)}$ with surface finish Rz=80 micron is allowed. In this case groove Y_1 (see A-A) may not be made.
15. Dimension ϕshould be checked at a distance not less than 321 mm from surface U (see A-A).
16. Minor diameter of threadU_1(see main view) may be decreased by $0^{+0.2}$ mm above tolerance andscrewing in of NO-GO gauge to depth not more than 8 mm is permitted.
17. Dimension Y_1 (see Б-Б) at hole $Ш_1$(see main view)should be not less than 7 mm at a distance 10 mm from surface U and on the rest of the length it should be not less than 9 mm.
18. Coming out of drill to the threadU_1(see general view) outside is allowed.
19. Surface α (see Д-Д) have contact to the surface $Д_1$with outlet to the lateral surface $Д_1$along dimension.3.
20. After removing lugs shoulders 0^{+4} mm between machined and casting surfaces and incision in the body as per dimensions $Б_1$ and $Ж_1$are allowed.
21. Surface finish of surface $И$ (see A-A) should be checked over a distance not less than 115 mm from axis. In this case shoulder is allowed.
22. Weight of component should be checked at random, once in a month maximum permissible weight is 45 Kg. Weight of component is given without taking into consideration of allowance for surfaces $Л$ (see left view) and M (see Г-Г).
23. On the surfaces A_1 and $Б_1$(see$Б^1$), without rectification of sections of casting area not exceeding 25% of total area is allowed.
24. Size of shoulders B_1 (see$Б$-$Б$) is not to be checked.
25. Other requirements should be as per specifications 520.TY1.
26. *Dimensions for reference.
27. **Dimensions and surface finish are to be ensured by tool.
28. To ensure dimension A_2, machining of surface $Б_2$(see A-A) is allowed with surface finish Rz=80 micronwithin the limits of tolerance for dimension B_2 is allowed.
29. On the surfaces $Г_1$ and $Д_1$ (see main view) rough spots are allowed without exceeding 1/3 of the total area.

PILOT SAMPLE SHOULD BE APPROVED BY A H S P BEFORE BULK PRODUCTION.

EST. WT. (kg) 41.80	TO BE STAMPED OR MARKED WHERE INDICATED THUS # (LETTERS)
ALL SHARP EDGES AND CORNERS TO BE REMOVED UNLESS OTHERWISE STATED MACHINED CORNERS TO HAVE R. OUTSIDE R. INSIDE EQUIVALENT CHAMFERS ARE PERMISSIBLE.	

ISSUE	DATE	NATURE OF AMENDMENTS

DRN		MATERIAL:- SPECIAL STEEL
CHD		USED ON:- 172.01.24-Ucb-LCb 172.01.24-Ucb-TCb
APPD		
DATE	2.6-10-04	CONTROLLERATE OF QUALITY ASSURANCE (HEAVY VEHICLES) AVADI
SCALE:- 1 : 2		
DIMENSIONS IN mm		TITLE:- 1ST RIGHT HAND SUPPORT OF ROAD WHEEL ARM
TOLERANCE ON DIMNS UNLESS OTHERWISE STATED IS : 2102 - 69		
ALL THREADS TO CONFORM TO		D S CAT NUMBER
		DRAWING NUMBER 172.01.728-2

DIES MANUFACTURED BASED ON RUSSIAN ORIGINAL ISSUE - 10 COMPARED TO 3-72-2 BLT

356

SUPPLY CODE LI-01-1-2

D90035

F - 50 1

SIZE A2 x 4