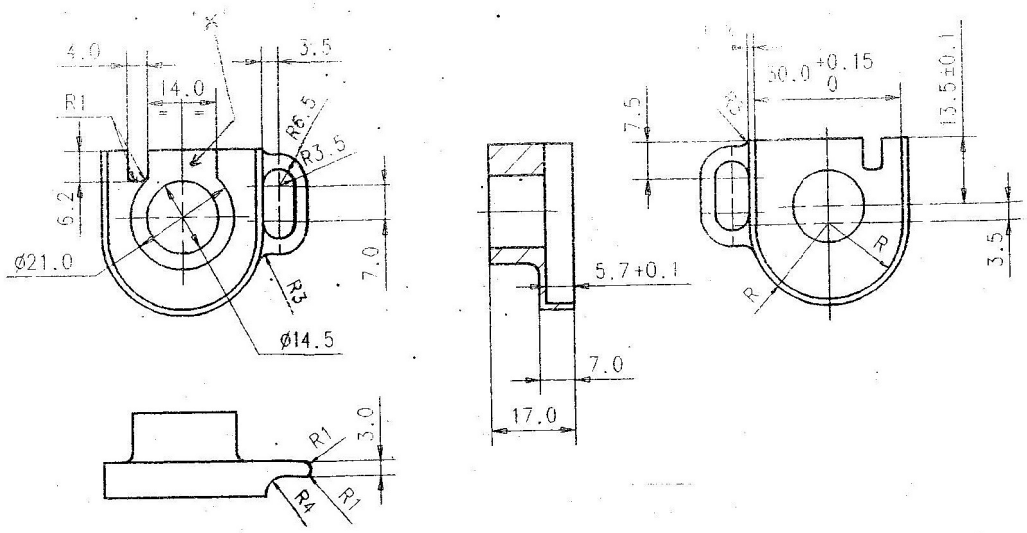

NOTES:-

1 ALL DIMNS. ARE IN mm.

2 UNTOLERANCED DIMNS. TO BE AS PER STD. I.S; 11166-1993 CLASS-1 OF INV. CASTING.

3 CASTING SHOULD BE FREE FROM DEFECTS LIKE CRACKS, HOT TEARS, COLD SHUTS ETC. AND SURFACE FINISH MUST BE SMOOTH.

4 VISUAL EXAMINATION SHOULD CONFORM TO CLAUSE 8.1 AND 8.2 OF SPECN. I.S: 10343-1993

5 DECURBURISATION SHOULD NOT BE MORE THAN 2% OF THE THICKNESS OF THE CASTING.

6 TEST SAMPLES SHOULD BE CAST FROM THE SAME MELT USED FOR MANUFACTURING OF THE CASTING AND SHOULD BE MADE TO SATISFY THE SPECN. I.S: 10343-1989.

7 TEST PIECES SHOULD BE TESTED IN ACCORDANCE WITH CLAUSE 1.10 SEC-1 OF SPECN. B.S: 3146 1974

8 SHARP EDGES AND BURRS IF ANY ARE TO BE REMOVED.

9 MAGNETIC TEST FOR CRACK DETECTION TO BE CARRIED OUT IN SAMPLES AS PER INSPECTION LEVEL AT A.Q.L. 0.65 AS PER I.S: 2500 Pt. 1. 1992

10 MANUFACTURERS SYMBOL WITH 3 mm. SIZE TO BE STAMPED AT 'X' MARK SHOWN IN CASTING.

11 RADIOGRAPHIC ACCEPTANCE STANDARD SHALL BE AS PER ASTM-E-192. GAS HOLES & FOREIGN MATL. LEVEL-5, SHRINKAGE LEVEL -3, CRACKS, COLD SHUTS, HOT TEARS ETC. NOT ACCEPTABLE.

i) RADIOGRAPHIC TEST TO BE CARRIED OUT AS FOLLOWS:- 100% FROM SAMPLE LOT FROM EACH SUPPLIER. THE LOT SHOULD NOT BE LESS THAN 10 NOS.

ii) 2% FROM SECOND LOT FROM EACH SUPPLIER THE LOT SHOULD NOT BE LESS THAN 100 NOS.

iii) 1% FROOM REPEATATIVE/BULK SUPPLY UNTIL THE PRODUCT IS ESTABLISHED BY VENDOR.

12 10 TO 15 NOS. SAMPLE CASTING DULY PASSED BY INSPECTOR IN RADIOGRAPH TEST, MATL. DIMNS. ETC. TO BE SENT TO THIS FACTORY FOR MACHINING & FITMENT TRIAL BEFORE BULK SUPPLY.

13 ALL DRAWING DIMENSIONS TO BE CHECKED AFTER HEAT TREATMENT AS PER RFI GAUGE SCHEDULE.

14 THE SUPPLIER WILL MANUFACTURE 02 SETS OF INSPECTION GAUGE AND GET IT VERIFIED BY RFI.

15 MACHINABILITY TO BE TESTED BY DRILLING Ø2.82 HOLE, THROUGH ON ATLEAST 02 SAMPLES.

16. CASTINGS ARE TO BE SUPPLIED IN ANNEALED CONDITION WITH HARDNESS 190-230 HV ALONG WITH THE TEST SAMPLES TO BE TESTED FOR HARDNESS AT ANNEALED CONDITION & ALSO AFTER FINAL HEAT TREATMENT

17. STRAIGHTNESS, PARALLELISM AND CONCENTRICITY OF WALL/RIB THICKNESS TO BE MAINTAIN W.R.T HOLE Φ14.5 MM WITHIN TOLERANCE 0.10 MM.

Verified 02.01.19

2. "X" MARK FOR MANUFACTURER'S SYMBOL INCORPORATED. 1. IN NOTES - SL NO. 16, 17 INCORPORATED	DETAILS OF AMENDMENT	SIGN
AC/002/19 0701-2019	DC NO. & DT	

MATERIAL:- BS:3146 PT 1 1974 TYPE CLA-12 GRADE C

ALL DIMENSIONS ARE IN MILLI METER
IMPORTENT DIMENSIONS MARKED THUS Φ
INFORMETION MARKED THUS † TO BE MARKED ON

TITLE OF COMP.	OPERATION	2016	NAME	DATE
INVESTMENT CASTING DRG. OF CUP		DGN.		
		DRN.	Munitra	
INDIAN ORDNANCE FACTORIES RIFLE FACTORY ISHAPORE	SCALE 1:1	CKD.		
		APPD.		

7.62 mm. ASSAULT RIFLE (GHAATAK)

CUP (AR/02/1-RFI)

DRG. NO. RFI SK NO. 9835/A

SHEET OF