DRG. NO. – FS-957'C'

ONLY FOR TRADE

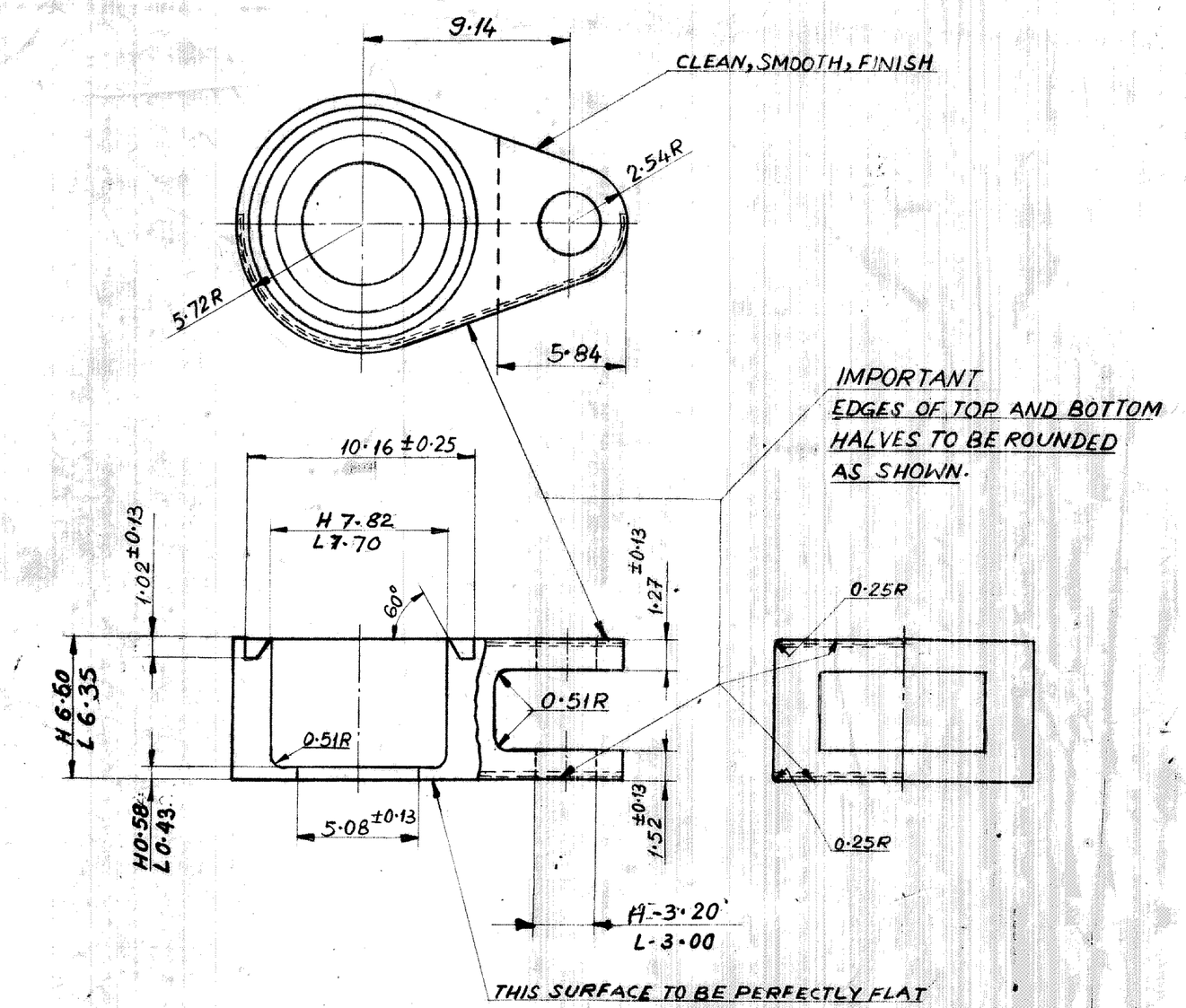

NOTE :-
TO BE PASSIVATED TO SPECN. L 10205 (LATEST ISSUE).

MATERIAL :-
BRASS TO SPECN. BS 2874 CZ 121-3Pb 'M'
OR BS 2874 CZ124 1/2 H CONDITION.

a) TOLERANCE ON UNTOLERANCED DIMENSIONS
FOR ONE DECIMAL PLACE ± 1·3
FOR TWO OR MORE DECIMAL PLACES ±0·13

b) TOLERANCE ON UNTOLERANCED ANGLES
GIVEN IN DEGREES ± 30' &
GIVEN IN DEGREES & MINUTES ± 5'

c) THE COMPONENT SHOULD BE COMPLETLY FREE FROM BURRS.

REV.	DATE	DESCRIPTION	SIGN.
'C' 194/03	9-4-03	DRG. REVISED AS PER LATEST DC-36103-A DATED 29·3·96.	AWM/QA
'B' 160/89	17-4-89	ALT. METHOD OF MFG DELETED.	WM/QA
378/87	16.10.87	1) THICKNES 6·5 WAS 6·6 2) L 3 +0·2 WAS L 2·794 +0·102 DRG. ADV. TO 'A' (AS PER C.I.A. LETTER NO. 8A.06828, dt 21/9/87)	16/10

AMENDMENTS

DIMENSIONS ARE IN mm			
THIRD ANGLE PROJECTION			
SCALE :- 4:1			
1984	NAME	DATE	
DRAWN	M.T.	10·1·84	
TRACED			
CHECKED		10-1-84	
F/D.O.		10/1/84	
APPD.	WMFS		
	1 OF A		

MATERIAL :- AS STATED

NOMENCLATURE

SHUTTER

(DC/36103-A, DATED 29-3-96)

SCHEDULE NO.

ORDNANCE FACTORY AMBAJHARI.

DRAWING NO. FS-957'C'

SHEET NO. – 1

NO. OF SHEETS – 1

OPERATION NO.

COMPT :- I.Q.X.7