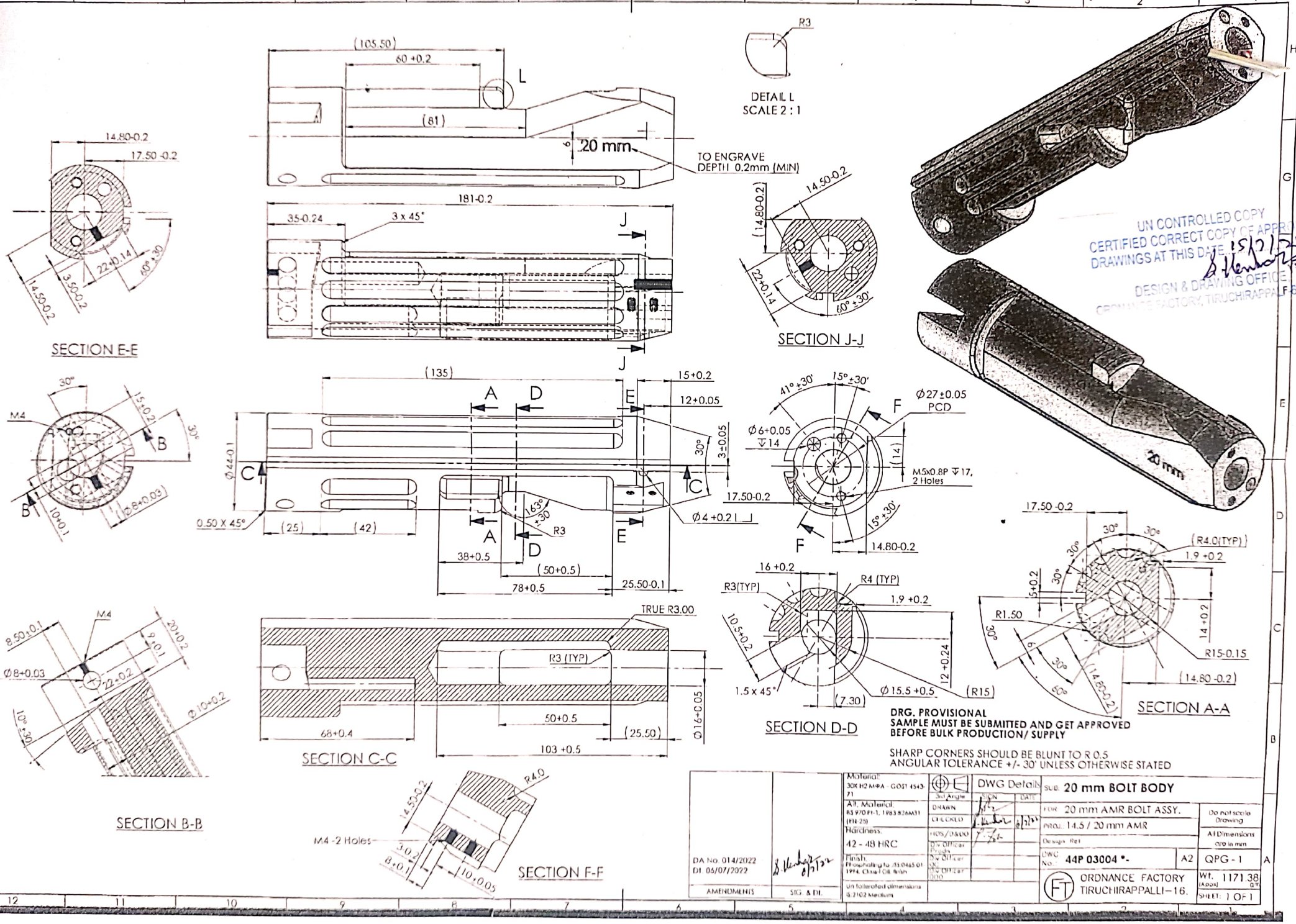

UN CONTROLLED COPY
CERTIFIED CORRECT COPY OF APPROVED DRAWINGS AT THIS DATE 15/7/22
DESIGN & DRAWING OFFICE
ORDNANCE FACTORY, TIRUCHIRAPPALLI-620 016

DRG. PROVISIONAL
SAMPLE MUST BE SUBMITTED AND GET APPROVED BEFORE BULK PRODUCTION/ SUPPLY

SHARP CORNERS SHOULD BE BLUNT TO R 0.5
ANGULAR TOLERANCE +/- 30' UNLESS OTHERWISE STATED

DA No. 014/2022 Dt. 06/07/2022		Material: 30X H2 MΦA - GOST 4543-71	DWG Details	SUB. 20 mm BOLT BODY	
		Alt. Material: BS 970 Pt-1, 1983 826M31 (EN-25)	3rd Angle / SIGN / DATE	FOR 20 mm AMR BOLT ASSY.	Do not scale Drawing
		Hardness: 42 - 48 HRC	DRAWN / CHECKED / HOS/D&DO	PROJ. 14.5 / 20 mm AMR	All Dimensions are in mm
		Finish: Phosphating to JSS 0465 01-1994, Class-I Oil finish	Div Officer Prodn / Div Officer QC / Div Officer DDO	Design Ref	
AMENDMENTS	SIG. & DT.	Un tollerated dimensions IS:2102 Medium		DWG No. 44P 03004 *- A2	QPG - 1
				ORDNANCE FACTORY TIRUCHIRAPPALLI-16.	Wt. 1171.38 (Appx) g/m SHEET: 1 OF 1