DRG. No. GCF/50/39423

DRAWING CONVENTIONS CONFROM TO SP:46
DIMNS. ARE IN mm. UNLESS OTHERWISE STATED.

(b1) PT. No. 1168219D SHOULD BE ENGRAVED.
FONT SIZE 6mm.

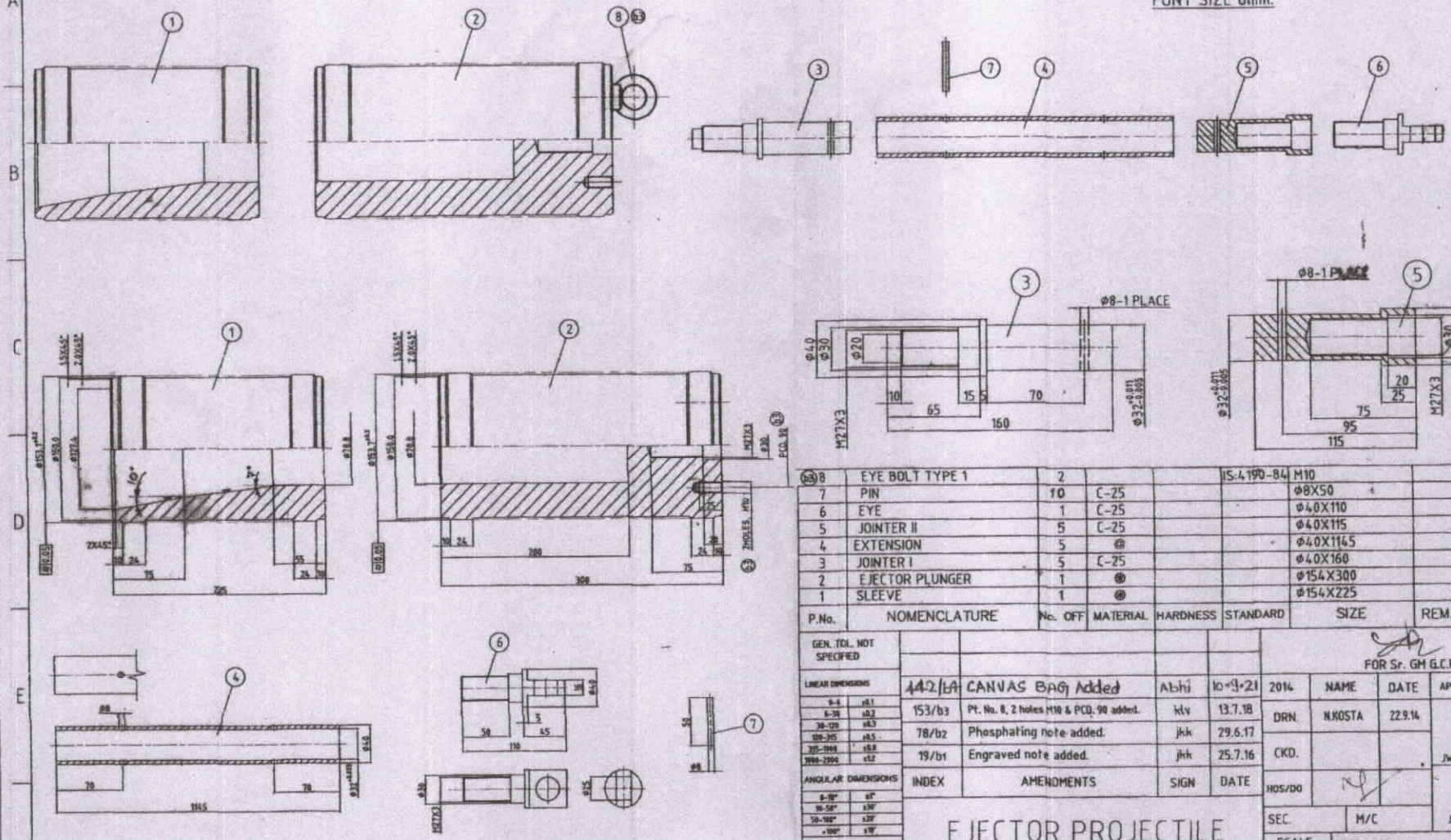

P.No.	NOMENCLATURE	No. OFF	MATERIAL	HARDNESS	STANDARD	SIZE	REMARKS
(b3) 8	EYE BOLT TYPE 1	2			IS:4190-84	M10	
7	PIN	10	C-25			ø8X50	
6	EYE	1	C-25			ø40X110	
5	JOINTER II	5	C-25			ø40X115	
4	EXTENSION	5	@			ø40X1145	
3	JOINTER I	5	C-25			ø40X160	
2	EJECTOR PLUNGER	1	⊛			ø154X300	
1	SLEEVE	1	⊛			ø154X225	

GEN. TOL. NOT SPECIFIED

LINEAR DIMENSIONS

0-6	±0.1
6-30	±0.2
30-120	±0.3
120-315	±0.5
315-1000	±0.8
1000-2000	±12

ANGULAR DIMENSIONS

0-10°	±1°
10-50°	±30'
50-120°	±20'
>120°	±10'

~ UNMACHINED
▽ ROUGH
▽▽ SMOOTH
▽▽▽ FINISH

INDEX	AMENDMENTS	SIGN	DATE
442/b4	CANVAS BAG Added	Abhi	10-9-21
153/b3	Pt. No. 8, 2 holes M10 & PCD. 90 added.	klv	13.7.18
78/b2	Phosphating note added.	jkk	29.6.17
19/b1	Engraved note added.	jkk	25.7.16

EJECTOR PROJECTILE (MODIFIED) 155 mm DHANUSH

GUN CARRIAGE FACTORY, JABALPUR

FOR Sr. GM G.C.Fy.

2014	NAME	DATE	APPROVED
DRN.	N.KOSTA	22.9.14	
CKD.			JWM/Shop
HOS/DO			
SEC.	M/C		JWM/TR
SCALE	REF.DEMD.		
	REF.DRG.NO.		
DRG.No.	GCF/50/39423		
SHEET NO.	OF	SHEETS	

(b2) TO BE PHOSPHATED AS PER JSS:0465-01:1998 CLASS II (FINISH J)
(b4) S.NO. 3, 4, 5 & 6 SHOULD BE SUPPLIED IN A CANVAS BAG.
⊛ MATL. FOR DET.NO. 1 & 2 :-IS:5517-1978, 40Ni6Cr4Mo3, LRS 63
@ MATL. FOR DET.NO. 4 :-IS:738-1994 DESIGNATION 63400, T6