PART No
172.28.001-2

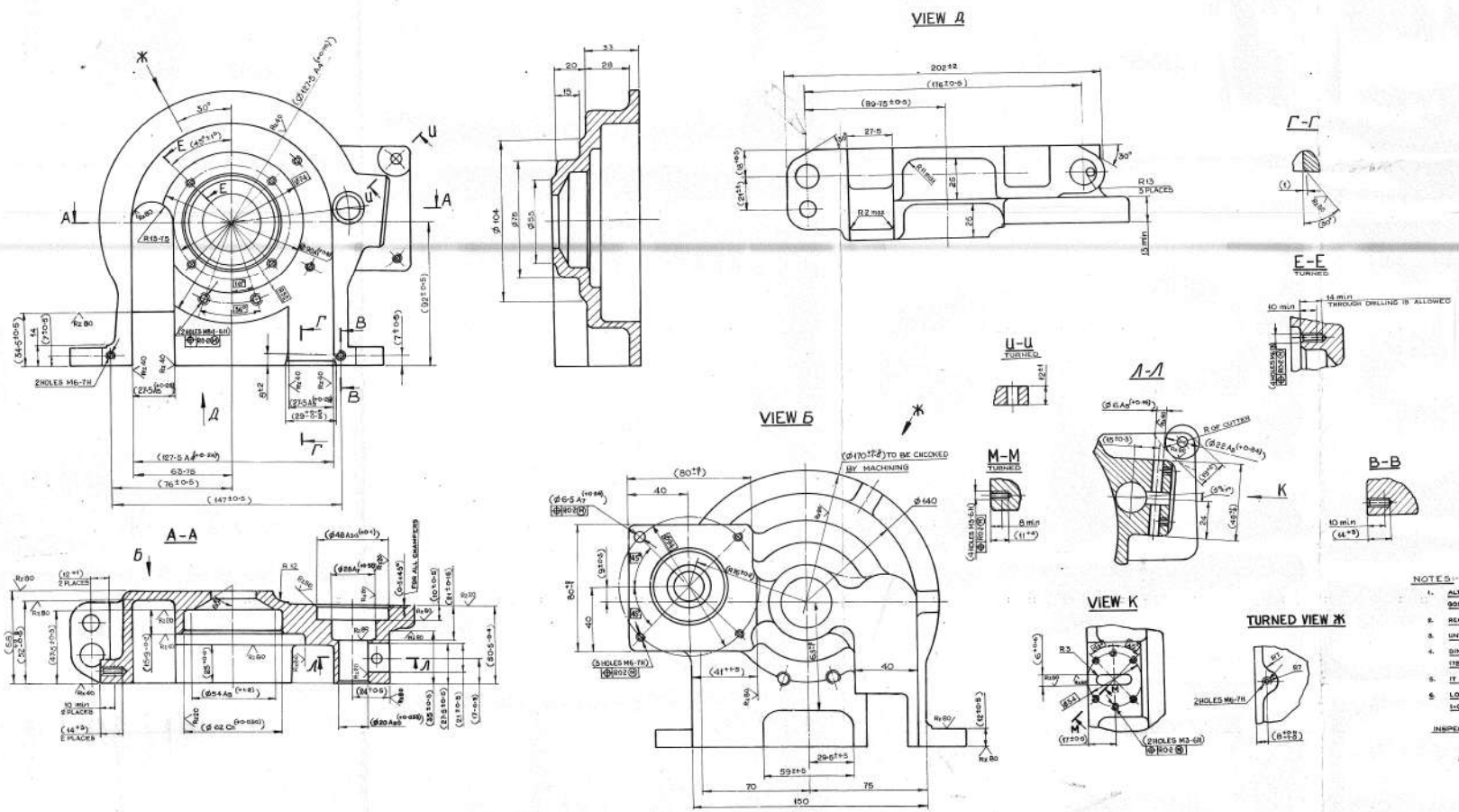

ALT MATL:
STEEL, A1 BS: 3100-1976

NOTES:-

1. ALTERNATE MATERIAL: STEEL GRADES 20 Л 1 THROUGH 25 Л 1, GOST 977-75, 20 ⌀ 1 TY 3-751-73
2. REQUIREMENTS FOR CASTING SHOULD BE AS PER 172 TY 4
3. UNSPECIFIED RADII SHOULD NOT EXCEED 8 mm
4. DIMENSIONS IN BRACKETS ARE TO BE PROVIDED AS PER DRAWING 172.28.022 C5-1A C6
5. IT IS ALLOWED TO MANUFACTURE AS PER THE DASH LINE
6. LOCAL THINNING OF THE WALLS ON THE SIDE OF CAST SURFACE BY 1.0 mm OVER THE TOLERANCE ON DIMENSION IS ALLOWED

INSPECTION NOTE:- FOR LIST OF GAUGES AND FIXTURES REFER GAUGE SHT No 85(W)-10095, SHT 1

DATE	AUTHORITY	ZONE	NATURE	SIG	SIG
24-07-2015	16079-W		DS CAT No. ADDED		
25-10-15	16814-W		HIGH MOMENT ADDED		
10-11-22	16729-W		INSPECTION NOTE ADDED		
5-3-16	17913-W		ALT MATL ADDED		
23-6-32	17323-W		REF. ARDT-LIST No. 7, BOCK 172 M, IN SECTION A-A DIMN 52 ± 0.5 - IAS 52 ± 0.4		
24-7-07			RETRACED WITHOUT CHANGE		

AMENDMENT

DRG. SEALED: DC(I) No 16436-N
DI 22-10-86
DO CQA(W)

DRAWN	CHD		ASSY DRG
TRACED: G.S.N	CHD		DATE: 13.8.85
C/O MAN	DO	FOR CQA(W)	SCALE: 1:1
			ESTD WT: 3.6

MATERIAL: STEEL 15 Л GOST 977-75
PROTECTIVE FINISH:

GROUP No. 40001 KD — F-129 / 19

CQA(AVA) AVADI

DESIG No.

PART No. 172.28.001-2

DO CAT No. 5340-180623

CASE केस

36